BE - GE	Parts Replacements List **3930L** **Controls left, 2-point safety belt**	Doc. R1-3930L Date 110411 Rev. 0
	Valid from 110411 to	Rev.Date

Be-Ge Industri AB • Box 912 • S-572 29 Oskarshamn • Sweden • Phone +46(0)491761800 • Fax +46(0)49181900

BE - GE Establ. 1934	Parts Replacements List **631303 Slide kit** **Mechanical release** **3100, 3400**	Doc. R1-631303 Date 071105 Rev. 1
	Valid from 070601 to	Rev.Date 090101

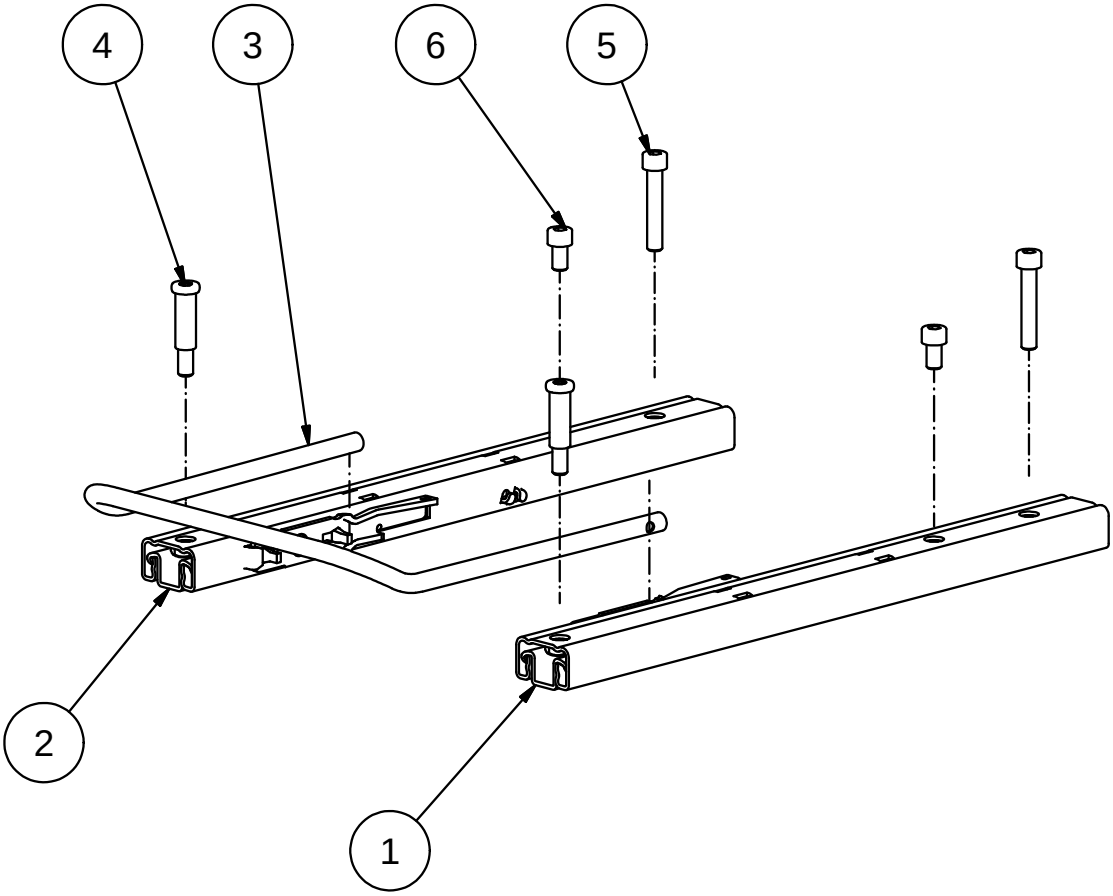

Fig.	Part. No.	Quantity	Description		
1	631072	1	SLIDE LEFT		
2	631073	1	SLIDE RIGHT		
3	631227	1	HANDLE SLIDE RAILS		
4	631101	2	SPACER BOLT		
5	423021	2	SCREW MC6S	M8x45	DIN912 ZN-BL. 8.8
6	650100	2	SCREW MC6S	M8x14	ZN BLACK

Be-Ge Industri AB • Box 912 • S-572 29 Oskarshamn • Sweden • Phone +46(0)491761800 • Fax +46(0)49181900

BE - GE Establ. 1934	Parts Replacements List **631304 Slide kit** **Pneumatic release** **3000, 3100**	Doc. R2-631304 Date 101210 Rev. 0
	Valid from 110101 to	Rev.Date

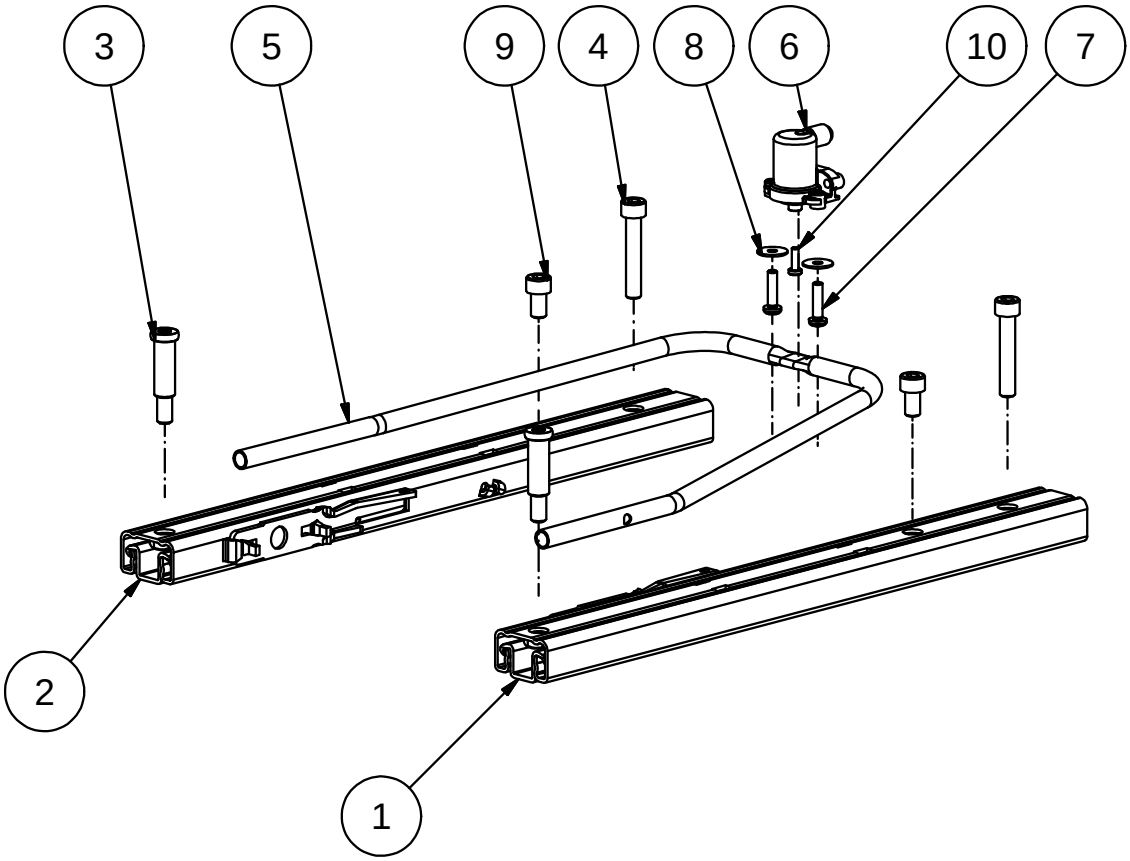

Fig.	Part. No.	Quantity	Description		
1	631072	1	SLIDE LEFT		
2	631073	1	SLIDE RIGHT		
3	631101	2	SPACER BOLT		
4	423021	2	SCREW MC6S	M8x45	DIN912 ZN-BL. 8.8
5	631254	1	HANDLE		
6	624248	1	CYLINDER Ø18-20		
7	650097	2	SCREW WN156-2	M5x20	ZN
8	652011	2	WASHER	5x16x1	
9	650100	2	SCREW MC6S	M8x14	ZN BLACK
10	650095	1	SCREW WN 156-3	M4x12	ZN

Be-Ge Industri AB • Box 912 • S-572 29 Oskarshamn • Sweden • Phone +46(0)491761800 • Fax +46(0)49181900

BE - GE Establ. 1934	Parts Replacements List **631635 Slide kit** **C&F** **3100, 3400**	Doc. R1-631635 Date 090101 Rev. 1
	Valid from 090101 to	Rev.Date 091016

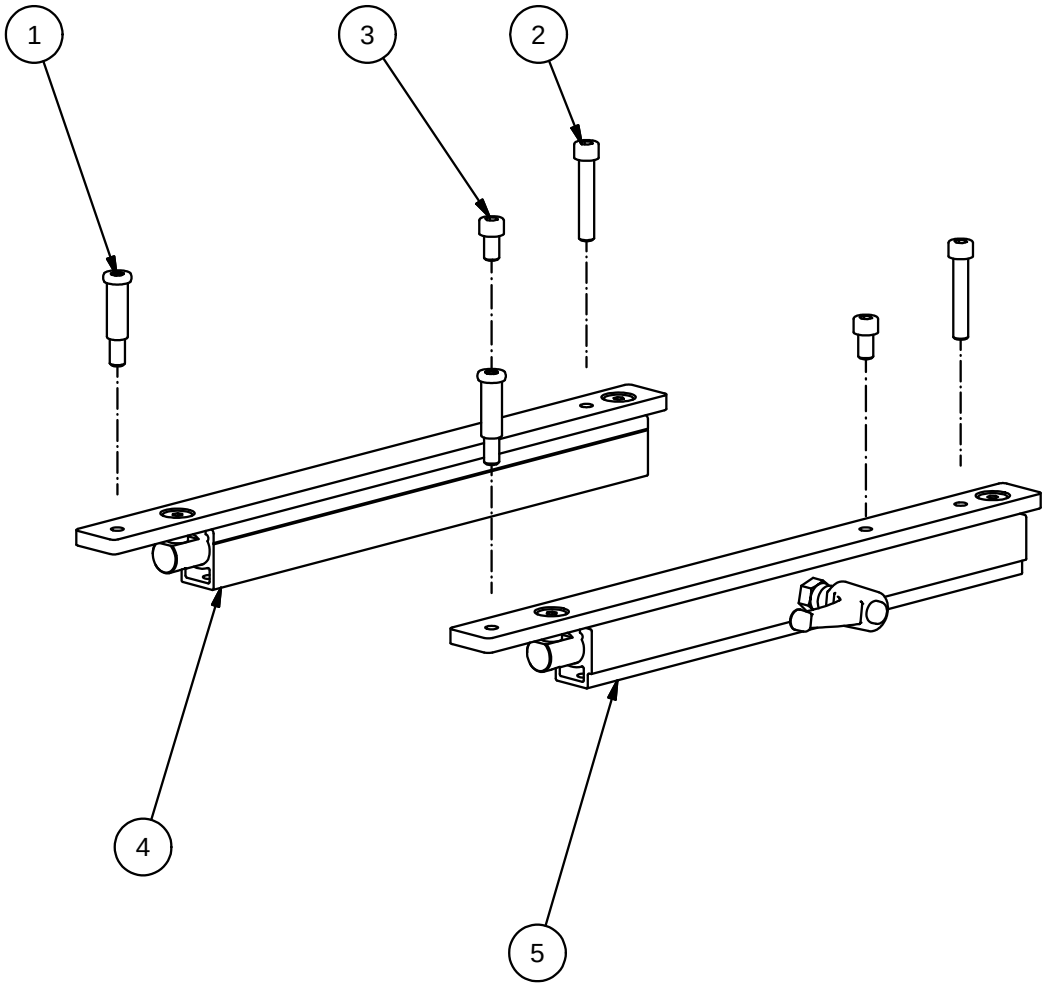

Fig.	Part. No.	Quantity	Description		
1	631101	2	SPACER BOLT		
2	423021	2	SCREW MC6S	M8x45	DIN912 ZN-BL. 8.8
3	650100	2	SCREW MC6S	M8x14	ZN BLACK
4	660676	1	SLIDE RAIL	C&F	
5	660677	1	SLIDE RAIL	C&F	LOCKABLE SIDE

Be-Ge Industri AB • Box 912 • S-572 29 Oskarshamn • Sweden • Phone +46(0)491761800 • Fax +46(0)49181900

BE - GE	Parts Replacements List **631799 Seat base kit** **3910**	Doc. R1-631799 Date 110411 Rev. 0
	Valid from 110411 to	Rev.Date

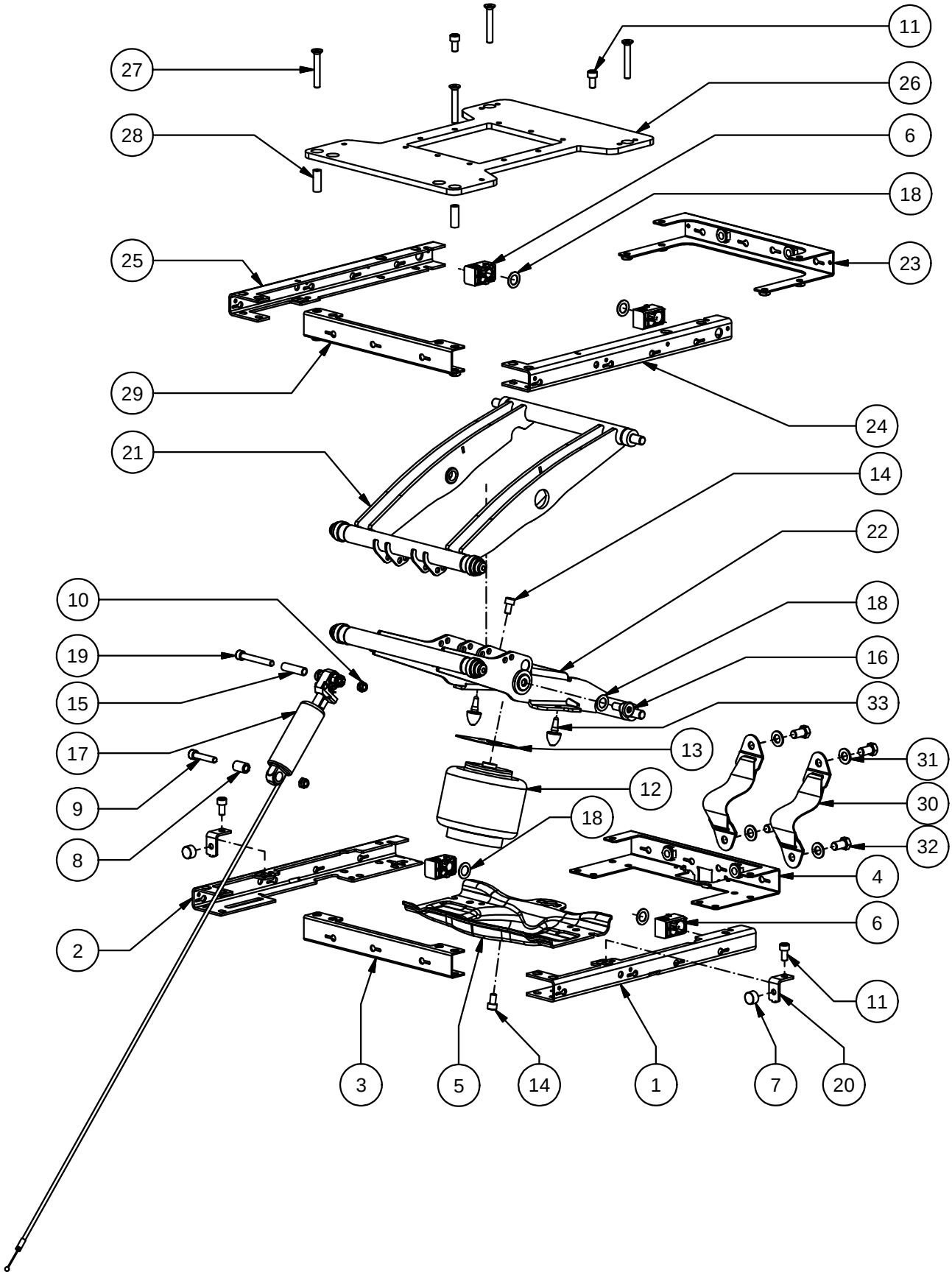

Be-Ge Industri AB • Box 912 • S-572 29 Oskarshamn • Sweden • Phone +46(0)491761800 • Fax +46(0)49181900

	Parts Replacements List **631799 Seat base kit** **3910**	Doc. R1-631799 Date 110411 Rev. 0
BE - GE	Valid from 110411 to	Rev.Date

Fig.	Part. No.	Quantity	Description		
1	631000	1	LOWER RAIL LEFT		
2	631001	1	LOWER RAIL RIGHT		
3	631002	1	LOWER FRONT CROSS PLATE		
4	631114	1	LOWER REAR CROSS PLATE		
5	631671	1	LOWER BRIDGE		
6	631051	4	BLOCK		
7	501409	2	RUBBER STOP		
8	622149	1	BUSHING		
9	650066	1	SCREW MC6S	M8x40	ISO4762 ZN 8.8
10	210401	2	LOCKING NUT	M8	DIN6925 ZN K8
11	650102	4	SCREW MC6S GF	M8x16	ZN BLACK
12	631251	1	AIR SPRING		SZ 51-10 P02
13	631675	1	PROTECTION SHEET		
14	650100	2	SCREW MC6S	M8x14	ZN BLACK
15	631498	1	SPACING SLEEVE		
16	631495	2	BEARING BOLT M10		
17	631517	1	SHOCK ABSORB. STD		
18	500392	6	PLASTIC WASHER		
19	650166	1	Screw MC6S	M8x60	DIN912 ZN 8.8
20	631552	2	HEIGHT LIMITER		
21	631736	1	MIDDLE SCISSORS ASM		
22	631737	1	INNER SCISSORS ASM		
23	631667	1	UPPER REAR CROSSPLATE, WELDED		
24	631730	1	UPPER RAIL LEFT		
25	631731	1	UPPER RAIL RIGHT		
26	631740	1	ADAPTER		
27	650174	4	MF6S M8x55	M8x55	DIN7991 ZN 10.9
28	631741	2	SLEEVE		
29	631739	1	UPPER FRONT CROSSPLATE		
30	631237	2	CATCH BELT		
31	652013	4	WASHER	12x22x2	ZN YELLOW
32	650051	4	SCREW U6S UNF	7/16x19	ZN YELLOW
33	631754	2	RUBBER STOP		

Be-Ge Industri AB • Box 912 • S-572 29 Oskarshamn • Sweden • Phone +46(0)491761800 • Fax +46(0)49181900

BE - GE	Parts Replacements List **631665 Protection bellow** **3900**	Doc. R1-631665 Date 110411 Rev. 0
	Valid from 110411 to	Rev.Date

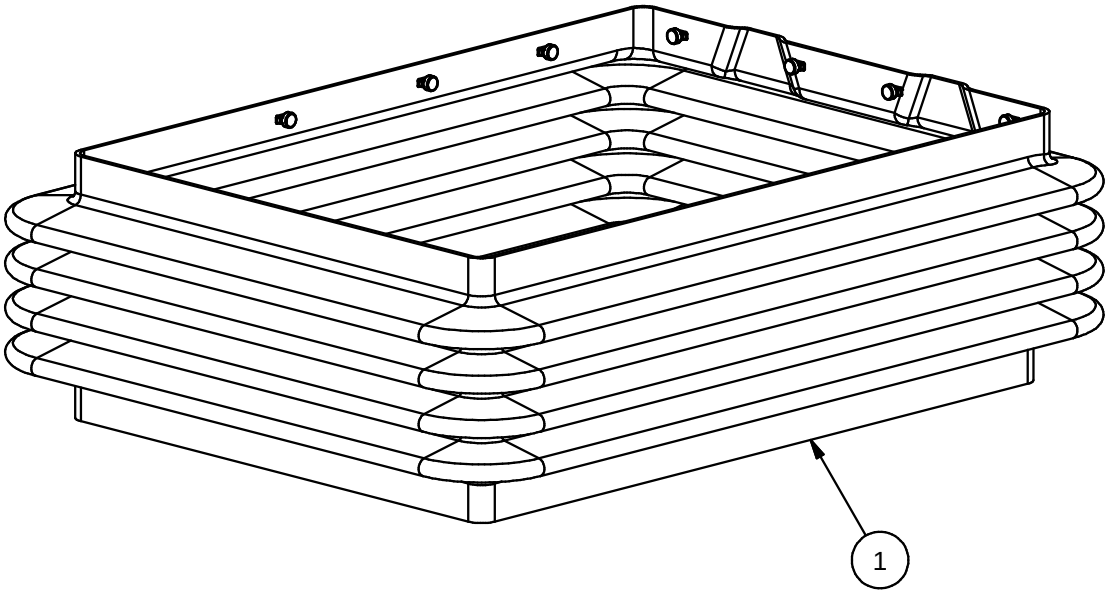

1	631665	1	PROTECTION BELLOW		

Be-Ge Industri AB • Box 912 • S-572 29 Oskarshamn • Sweden • Phone +46(0)491761800 • Fax +46(0)49181900

BE - GE Establ. 1934	Parts Replacements List **631802 Slide kit** **3800** **Mechanical release**	Doc. R1-631802 Date 110411 Rev. 0
	Valid from 110411 to	Rev.Date

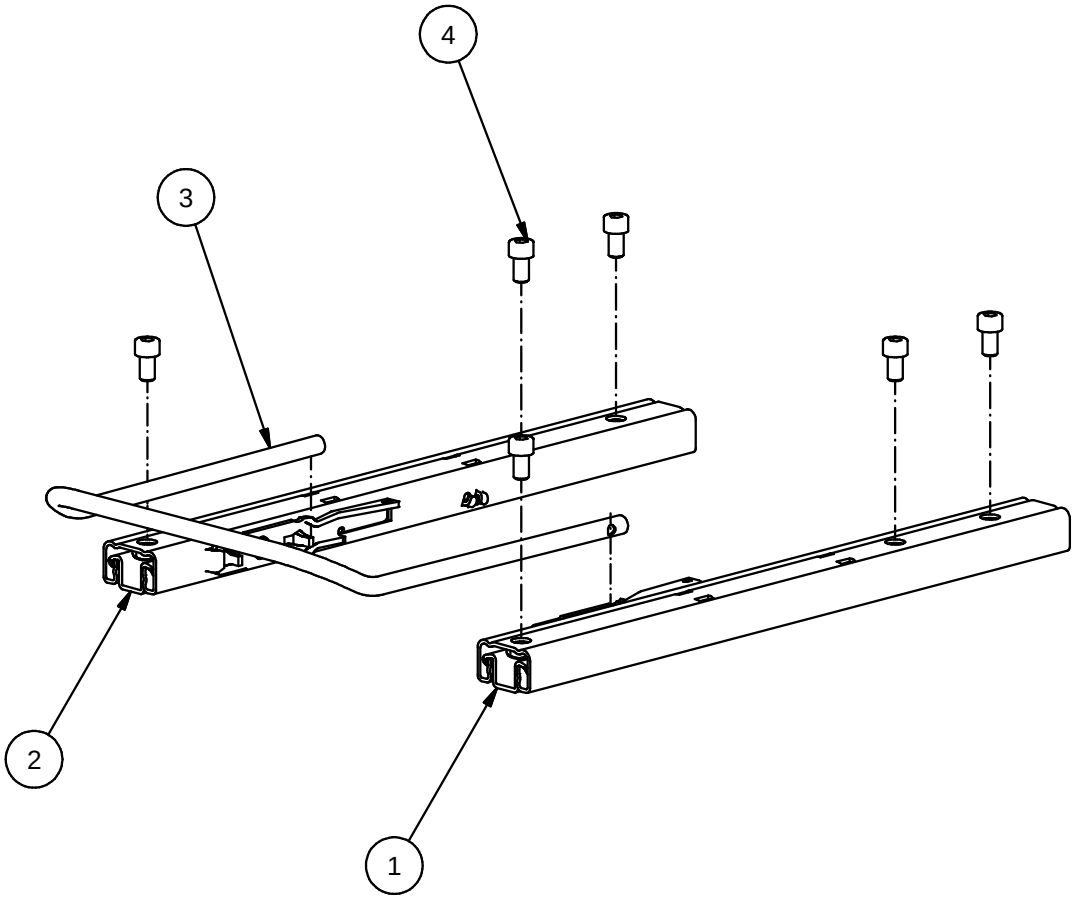

Fig.	Part. No.	Quantity	Description		
1	631072	1	SLIDE LEFT		
2	631073	1	SLIDE RIGHT		
3	631227	1	HANDLE SLIDE RAILS		
4	650100	6	SCREW MC6S	M8x14	ZN BLACK

Be-Ge Industri AB • Box 912 • S-572 29 Oskarshamn • Sweden • Phone +46(0)491761800 • Fax +46(0)49181900

BE - GE Establ. 1934	Parts Replacements List **631803 Slide kit** **3800** **Pneumatic release**	Doc. R1-631803 Date 110411 Rev. 0
	Valid from 110411 to	Rev.Date

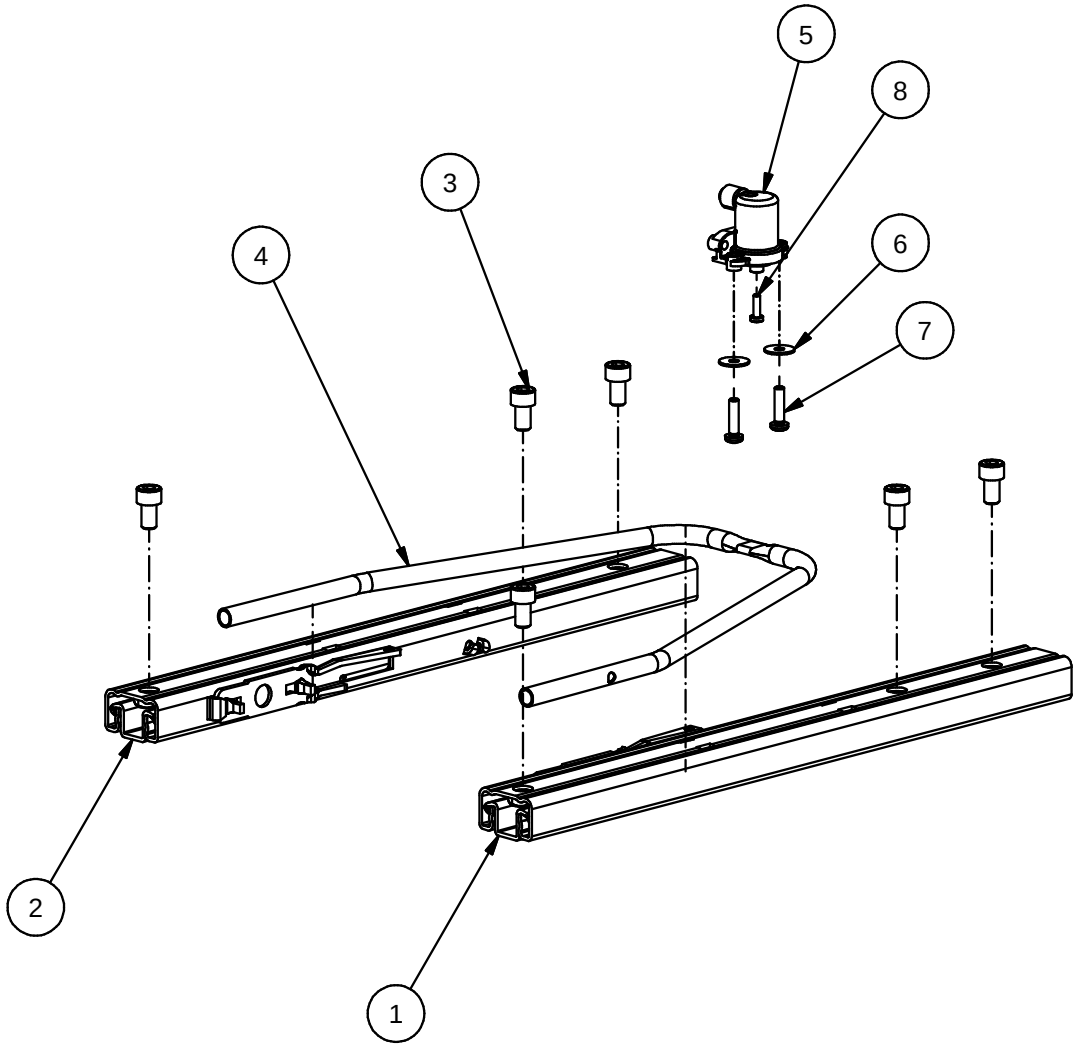

Fig.	Part. No.	Quantity	Description		
1	631072	1	SLIDE LEFT		
2	631073	1	SLIDE RIGHT		
3	650100	6	SCREW MC6S	M8x14	ZN BLACK
4	631558	1	HANDLE		
5	624248	1	CYLINDER Ø18-20		
6	652011	2	WASHER	5x16x1	
7	650097	2	SCREW WN156-2	M5x20	ZN
8	650095	1	SCREW WN 156-3	M4x12	ZN

Be-Ge Industri AB • Box 912 • S-572 29 Oskarshamn • Sweden • Phone +46(0)491761800 • Fax +46(0)49181900

BE - GE	Parts Replacements List **631776 Seat base kit** **3800** *Page. No.* 1 (2)	Doc. R2-631776 Date 110411 Rev. 1
	Valid from 120101 to	Rev.Date 111013

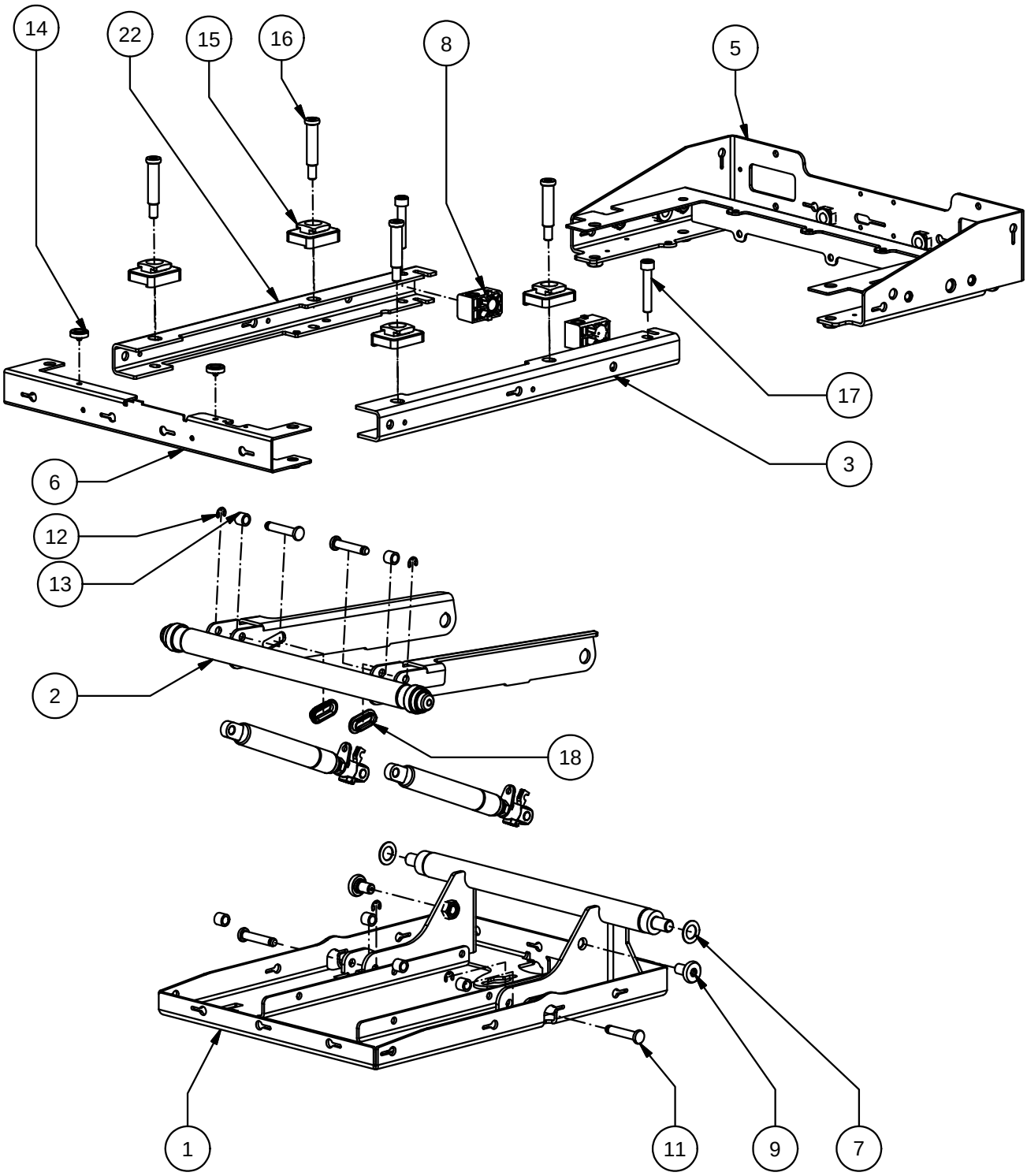

Be-Ge Industri AB • Box 912 • S-572 29 Oskarshamn • Sweden • Phone +46(0)491761800 • Fax +46(0)49181900

BE - GE	Parts Replacements List **631776 Seat base kit** **3800** *Page. No.* 2 (2)	Doc. R2-631776 Date 110411 Rev. 1
	Valid from 120101 to	Rev.Date 111013

Fig.	Part. No.	Quantity	Description		
1	631662	1	BASE ASM		
2	631515	1	OUTER SCISSORS ASM		
3	631827	1	UPPER RAIL LEFT		
5	631825	1	WELDED BRACKET BACKREST		
6	631823	1	UPPER FRONT CROSS PLATE		
7	500392	2	PLASTIC WASHER		
8	631051	2	BLOCK		
9	631299	2	BEARING BOLT		
10	631557	2	GAS SPRING SRH		
11	631196	4	PIN		
12	462009	4	RETAINING RING	RS7	DIN6799 ZN
13	660636	6	SPACER	8.2x12x10	
14	631519	2	SLIDE KNOB		
15	631817	4	SLIDE BLOCK		
16	631100	4	SPACER BOLT		
17	423021	2	SCREW MC6S	M8x45	DIN912 ZN-BL. 8.8
18	631674	2	CABLE PROTECTION		
22	631828	1	UPPER RAIL RIGHT		

BE - GE	Parts Replacements List **631798 Seat base kit** **3800** **Air tilt** *Page. No.* 1 (2)	Doc. R2-631798 Date 110411 Rev. 1
	Valid from 120101 to	Rev.Date 111013

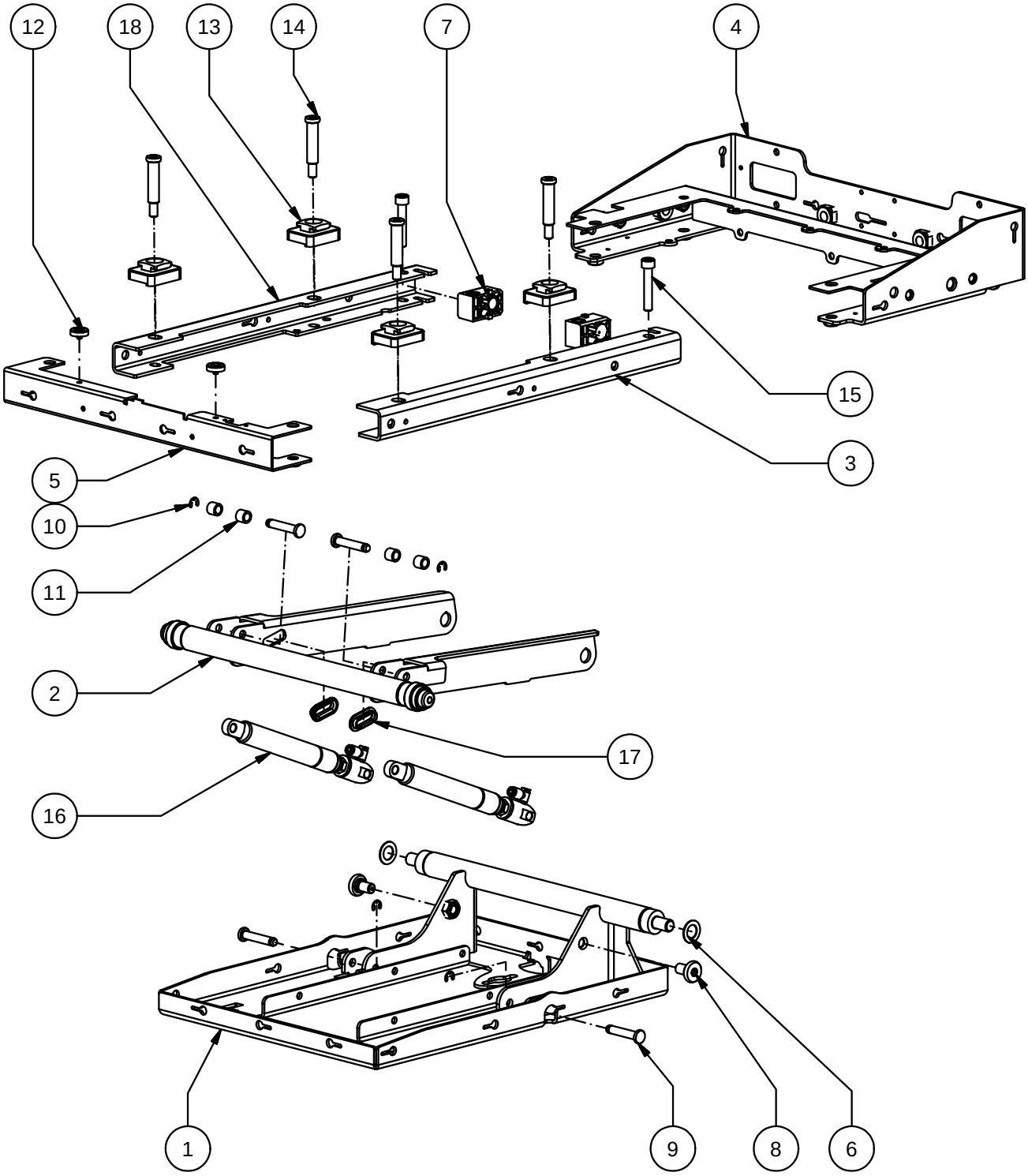

Be-Ge Industri AB • Box 912 • S-572 29 Oskarshamn • Sweden • Phone +46(0)491761800 • Fax +46(0)49181900

631798 Seat base kit

3800

Air tilt

Valid from 120101 to

Doc.	R2-631798
Date	110411
Rev.	1
Rev.Date	111013

Fig.	Part. No.	Quantity	Description		
1	631662	1	BASE ASM		
2	631515	1	OUTER SCISSORS ASM		
3	631827	1	UPPER RAIL LEFT		
4	631825	1	WELDED BRACKET BACKREST		
5	631823	1	UPPER FRONT CROSS PLATE		
6	500392	2	PLASTIC WASHER		
7	631051	2	BLOCK		
8	631299	2	BEARING BOLT		
9	631196	4	PIN		
10	462009	4	RETAINING RING	RS7	DIN6799 ZN
11	660636	4	SPACER	8.2x12x10	
12	631519	2	SLIDE KNOB		
13	631817	4	SLIDE BLOCK		
14	631100	4	SPACER BOLT		
15	423021	2	SCREW MC6S	M8x45	DIN912 ZN-BL. 8.8
16	631207	2	GAS SPRING PRH		
17	631674	2	CABLE PROTECTION		
18	631828	1	UPPER RAIL RIGHT		

BE - GE Establ. 1934	Parts Replacements List **631567 Control kit** **Controls left +/-** **3000**	Doc. R1-631567 Date 090101 Rev.
	Valid from 090101 to	Rev.Date

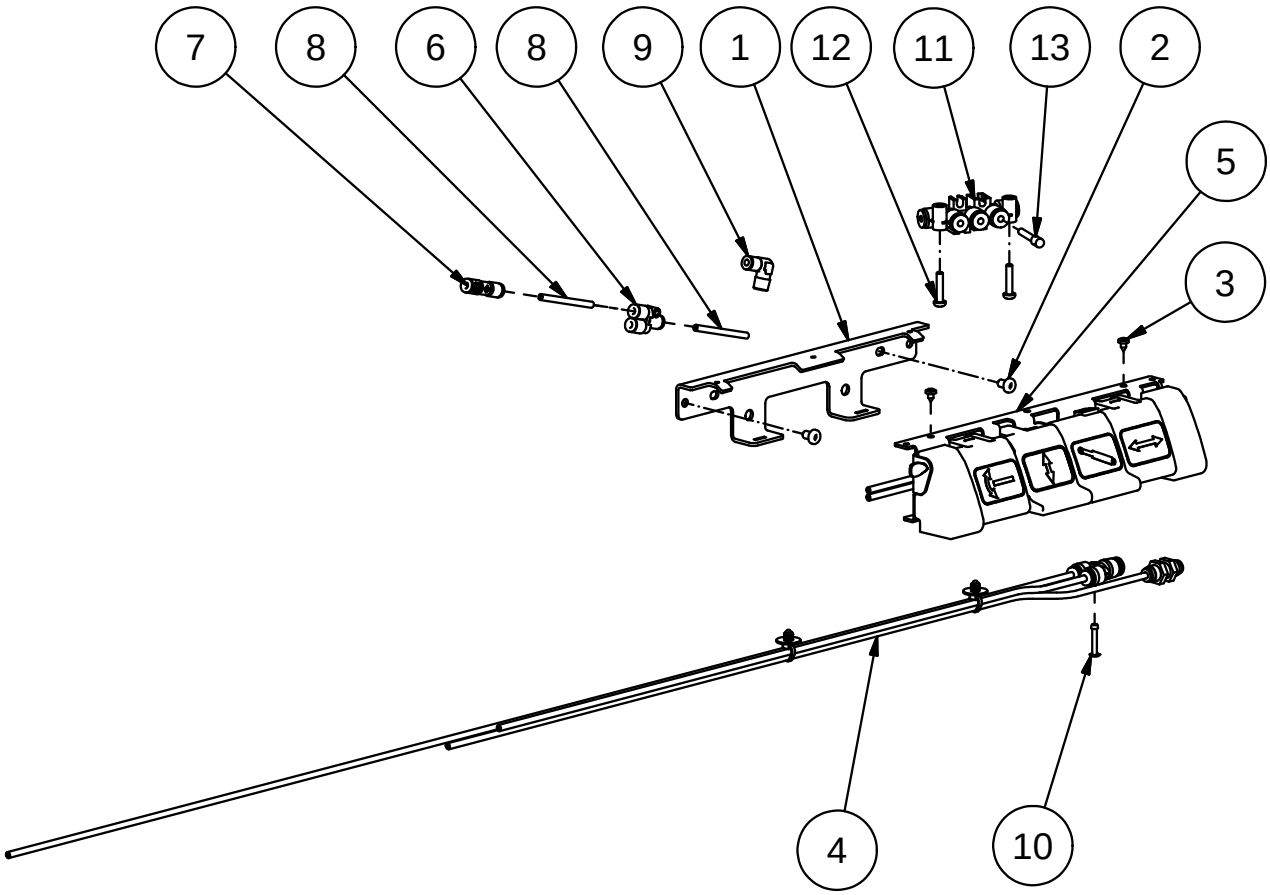

Fig.	Part. No.	Quantity	Description		
1	631039	1	BRACKET		
2	650088	2	SCREW MRT-TT	M5x8	ISO7045 ZN
3	650152	2	SCREW RTS	ST3.5x6.5	DIN7981C ZN
4	631500	1	TUBE ASM, STANDARD		
5	631270	1	CONTROL SET		
6	660603	1	Y-CONNECTION		
7	660614	1	NON RETURN VALVE		
8	660605	2	TUBE 4x2,5 GREEN		
9	660397	1	ONE TOUCH FITTING ELBOW	4-1/8	
10	653015	1	RIVET AL/ST	3.0x20	
11	660592	1	ONE-TOUCH FITTING	KM16	MANIFOLD
12	650156	2	SCREW MRT-TT	M4x20	ZN
13	660640	1	PLUG	4 mm	ONE TOUCH FITTING

Be-Ge Industri AB • Box 912 • S-572 29 Oskarshamn • Sweden • Phone +46(0)491761800 • Fax +46(0)49181900

BE - GE Establ. 1934	Parts Replacements List **631569 Control kit** **Controls left +/- DPS** **3000**	Doc. R1-631569 Date 090101 Rev.
	Valid from 090101 to	Rev.Date

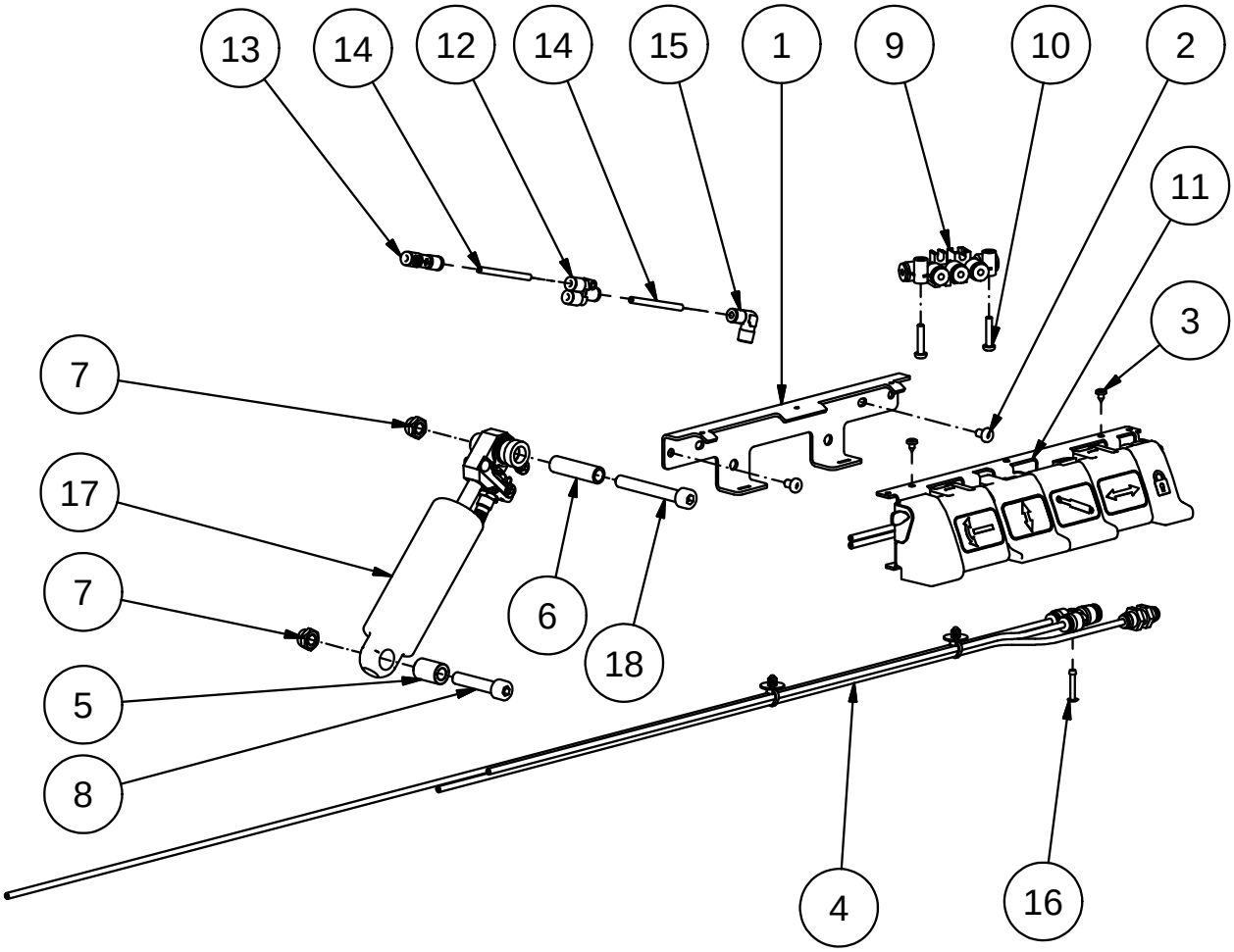

Fig.	Part. No.	Quantity	Description		
1	631039	1	BRACKET		
2	650088	2	SCREW MRT-TT	M5x8	ISO7045 ZN
3	650152	2	SCREW RTS	ST3.5x6.5	DIN7981C ZN
4	631500	1	TUBE ASM, STANDARD		
5	622149	1	BUSHING		
6	631498	1	SPACING SLEEVE		
7	210401	2	LOCKING NUT	M8	DIN6925 ZN K8
8	650066	1	SCREW MC6S	M8x40	ISO4762 ZN 8.8
9	660592	1	ONE-TOUCH FITTING	KM16	MANIFOLD
10	650156	2	SCREW MRT-TT	M4x20	ZN
11	631273	1	CONTROL SET		
12	660603	1	Y-CONNECTION		
13	660614	1	NON RETURN VALVE		
14	660605	2	TUBE 4x2,5 GREEN		
15	660397	1	ONE TOUCH FITTING ELBOW	4-1/8	
16	653015	1	RIVET AL/ST	3.0x20	
17	631518	1	SHOCK ABSORBER DPS		
18	650166	1	Screw MC6S	M8x60	DIN912 ZN 8.8

Be-Ge Industri AB • Box 912 • S-572 29 Oskarshamn • Sweden • Phone +46(0)491761800 • Fax +46(0)49181900

BE - GE Establ. 1934	Parts Replacements List **631575 Control kit** **Controls left +/-** **3100**	Doc. R1-631575 Date 090101 Rev.
	Valid from 090101 to	Rev.Date

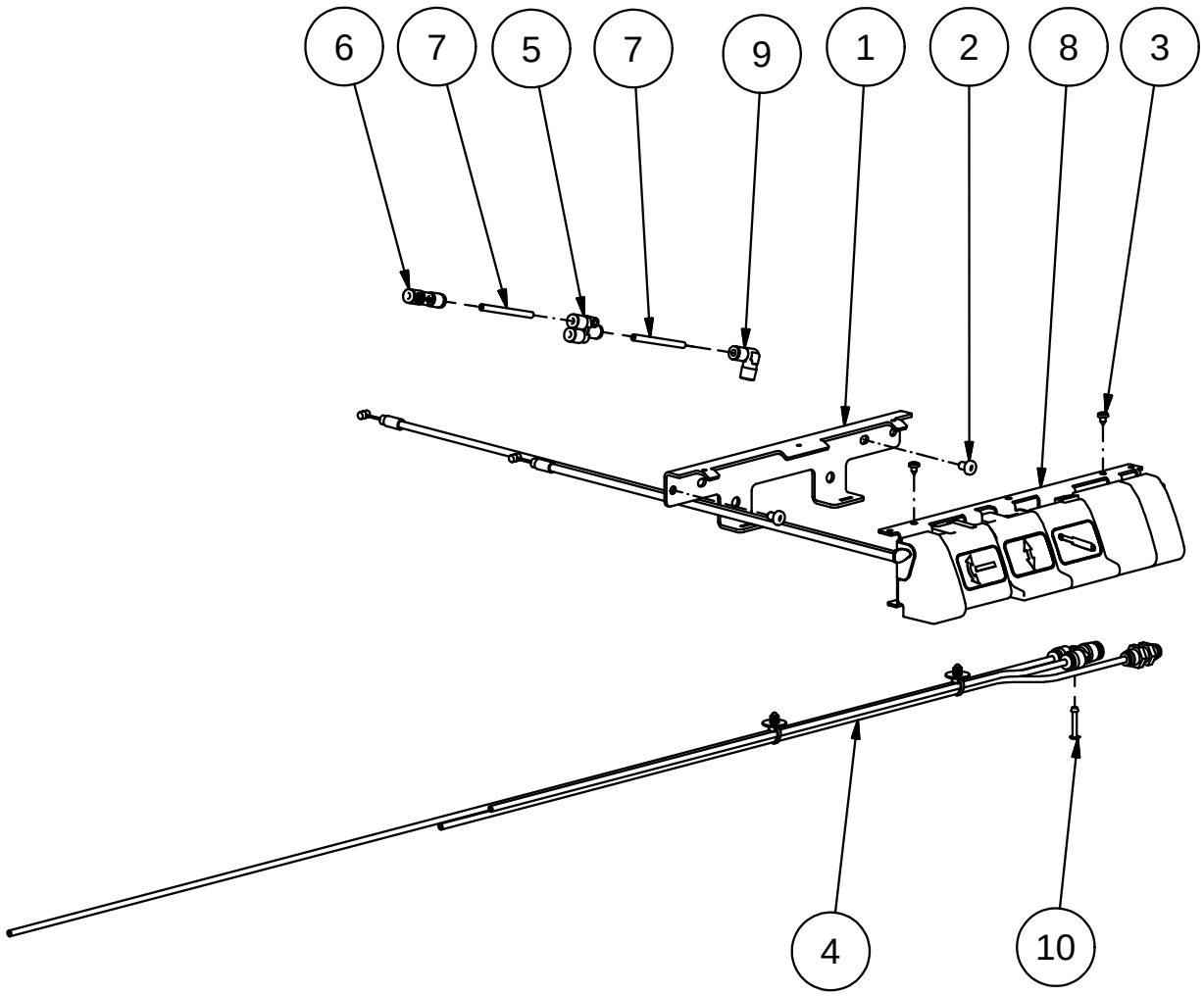

Fig.	Part. No.	Quantity	Description		
1	631039	1	BRACKET		
2	650088	2	SCREW MRT-TT	M5x8	ISO7045 ZN
3	650152	2	SCREW RTS	ST3.5x6.5	DIN7981C ZN
4	631500	1	TUBE ASM, STANDARD		
5	660603	1	Y-CONNECTION		
6	660614	1	NON RETURN VALVE		
7	660605	2	TUBE 4x2,5 GREEN		
8	631282	1	CONTROL SET		
9	660397	1	ONE TOUCH FITTING ELBOW	4-1/8	
10	653015	1	RIVET AL/ST	3.0x20	

Be-Ge Industri AB • Box 912 • S-572 29 Oskarshamn • Sweden • Phone +46(0)491761800 • Fax +46(0)49181900

BE - GE Establ. 1934	Parts Replacements List **631577 Control kit** **Controls left +/- DPS** **3100**	Doc. R1-631577 Date 090101 Rev.
	Valid from 090101 to	Rev.Date

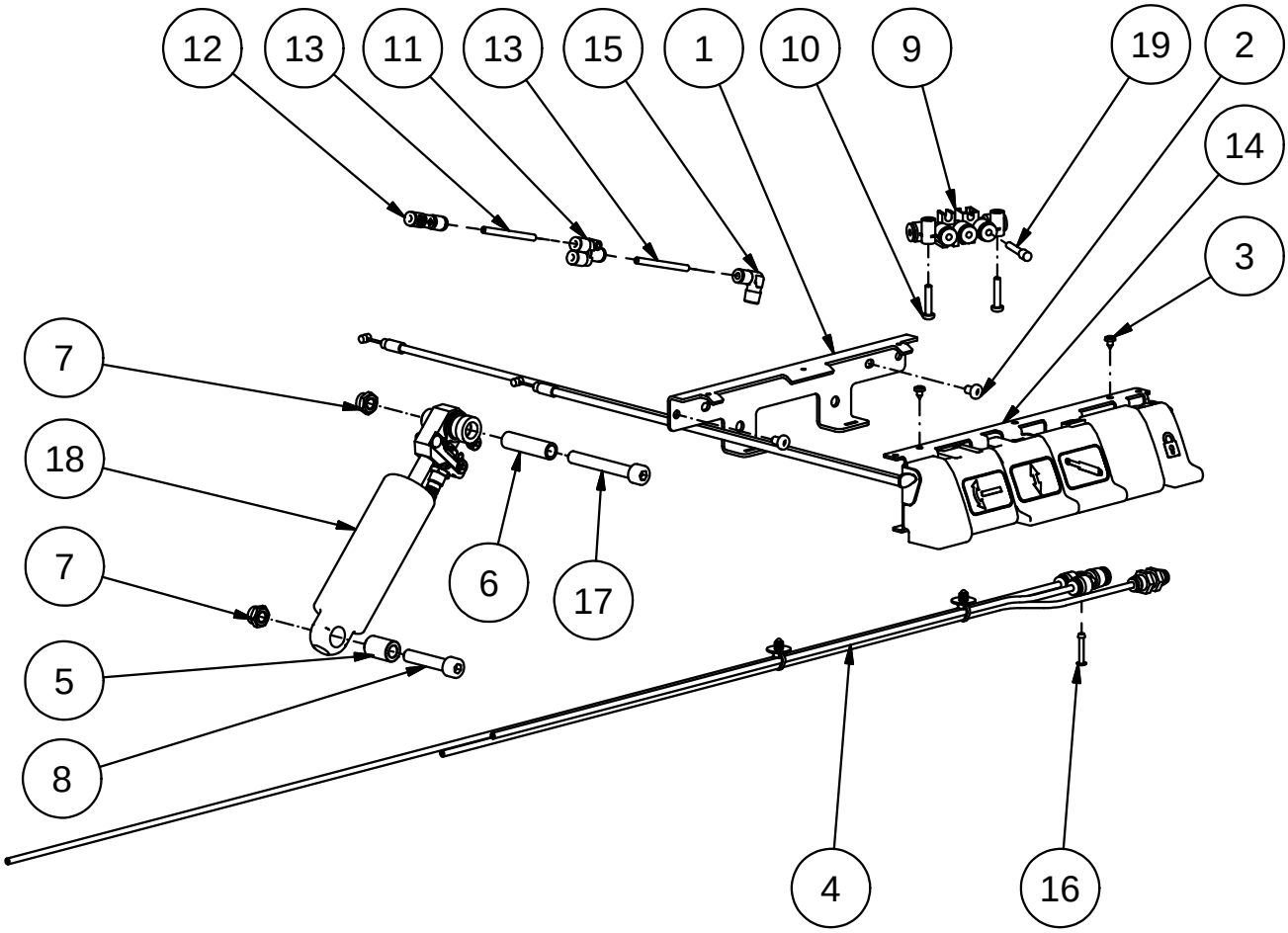

Fig.	Part. No.	Quantity	Description		
1	631039	1	BRACKET		
2	650088	2	SCREW MRT-TT	M5x8	ISO7045 ZN
3	650152	2	SCREW RTS	ST3.5x6.5	DIN7981C ZN
4	631500	1	TUBE ASM, STANDARD		
5	622149	1	BUSHING		
6	631498	1	SPACING SLEEVE		
7	210401	2	LOCKING NUT	M8	DIN6925 ZN K8
8	650066	1	SCREW MC6S	M8x40	ISO4762 ZN 8.8
9	660592	1	ONE-TOUCH FITTING	KM16	MANIFOLD
10	650156	2	SCREW MRT-TT	M4x20	ZN
11	660603	1	Y-CONNECTION		
12	660614	1	NON RETURN VALVE		
13	660605	2	TUBE 4x2,5 GREEN		
14	631285	1	CONTROL SET		
15	660397	1	ONE TOUCH FITTING ELBOW	4-1/8	
16	653015	1	RIVET AL/ST	3.0x20	
17	650166	1	Screw MC6S	M8x60	DIN912 ZN 8.8
18	631518	1	SHOCK ABSORBER DPS		
19	660640	1	PLUG	4 mm	ONE TOUCH FITTING

Be-Ge Industri AB • Box 912 • S-572 29 Oskarshamn • Sweden • Phone +46(0)491761800 • Fax +46(0)49181900

BE - GE Establ. 1934	Parts Replacements List **631585 Control kit** **Controls left +/- C4** **3100**	Doc. R1-631585 Date 090101 Rev. 2
	Valid from 090101 to	Rev.Date 110224

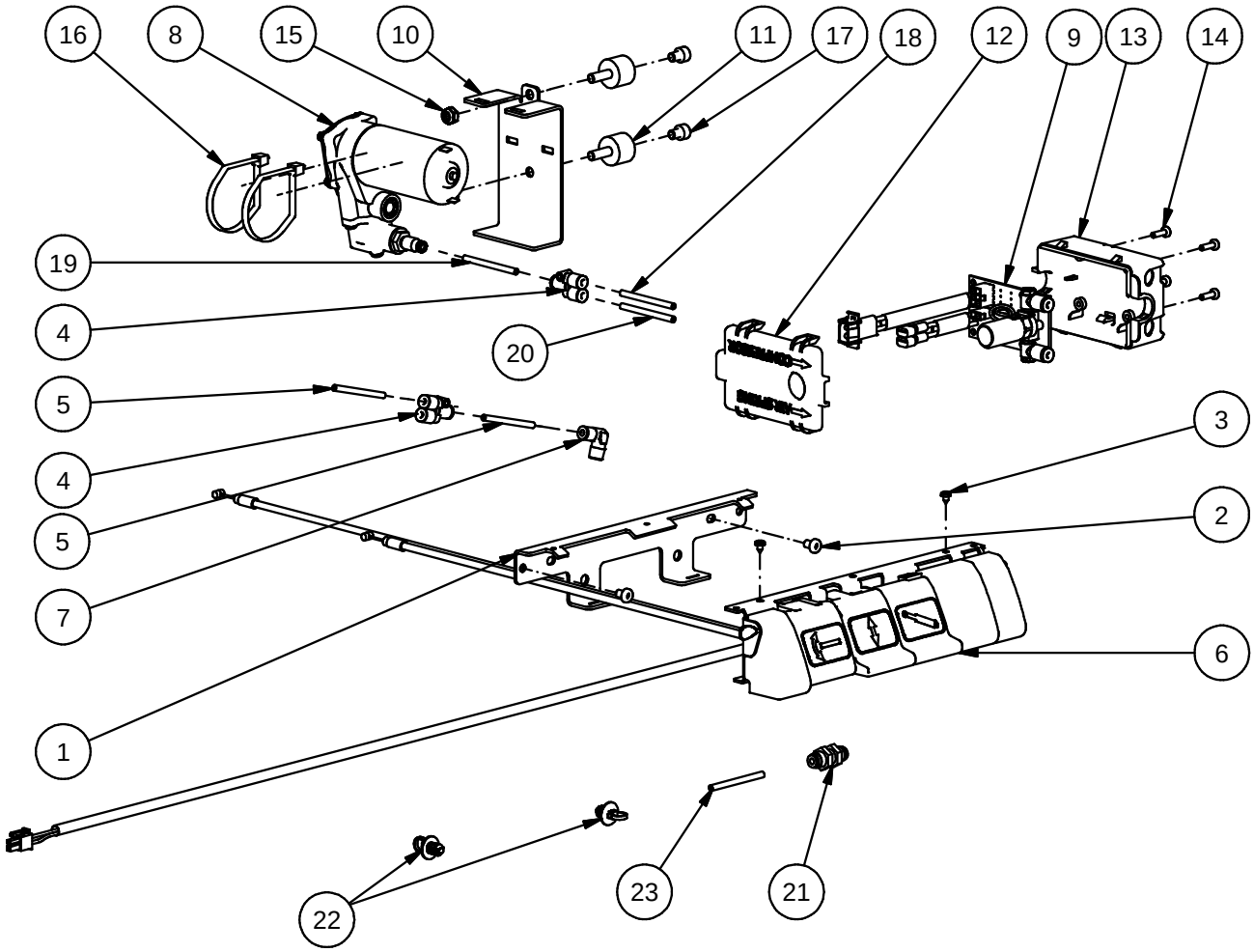

Fig.	Part. No.	Quantity	Description		
1	631039	1	BRACKET		
2	650088	2	SCREW MRT-TT	M5x8	ISO7045 ZN
3	650152	2	SCREW RTS	ST3.5x6.5	DIN7981C ZN
4	660603	2	Y-CONNECTION		
5	660605	2	TUBE 4x2,5 GREEN		(70 mm) (420 mm)
6	631582	1	CONTROL SET		
7	660397	1	ONE TOUCH FITTING ELBOW	4-1/8	
8	622864	1	COMPRESSOR THOMAS 24V		
9	631520	1	CONTROL UNIT		
10	631521	1	BRACKET COMPRESSOR		
11	660658	2	CYLINDRICAL VIB. DAMPER		
12	631511	1	COVER, BOX ELECTRONICS		
13	631510	1	BOX ELECTRONICS		
14	650095	4	SCREW WN 156-3	M4x12	ZN
15	651009	2	LOCK NUT	M6	(DIN 6924) FZB
16	500317	2	STRIPE		
17	650167	2	SCREW MC6S	M6x8	ISO 4762 FZB
18	660609	1	TUBE 4x2,5 RED		(240 mm)
19	660388	1	TUBE 4x2,5 BLACK	DIN 73378	(110 mm)
20	660712	1	TUBE 4x2 RED		(340 mm)
21	660739	1	BULKHEAD CONNECTOR		
22	660673	2	CLIP, CABLE TIE		
23	660425	1	TUBE 4x2,5 BLACK		(1100mm)

Be-Ge Industri AB • Box 912 • S-572 29 Oskarshamn • Sweden • Phone +46(0)491761800 • Fax +46(0)49181900

BE - GE Establ. 1934	Parts Replacements List **631331 Cover kit** **Controls left, buckle left** **3000, 3100, 3400**	Doc. R1-631331 Date 071105 Rev.
	Valid from 070601 to	Rev.Date

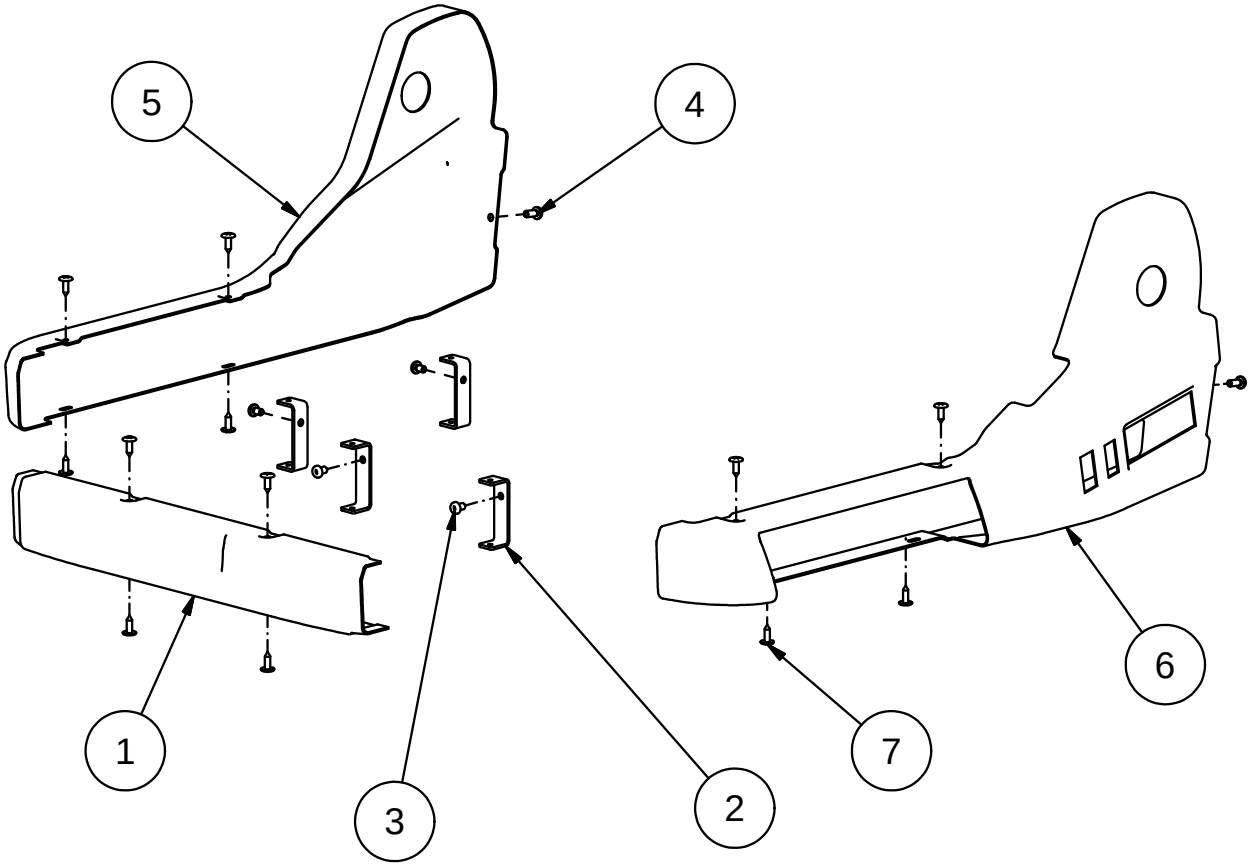

Fig.	Part. No.	Quantity	Description		
1	631102	1	FRONT COVER		
2	631062	4	BRACKET, COVER		
3	650088	4	SCREW MRT-TT	M5x8	ISO7045 ZN
4	650126	2	SCREW MRT-TT	M5x12	ISO7045 ZN BLACK
5	631099	1	SIDE COVER		
6	631097	1	SIDE COVER W CONTROLS		
7	650118	12	SCREW MONTAGE	4.2x14	BLACK PAINTED

Be-Ge Industri AB • Box 912 • S-572 29 Oskarshamn • Sweden • Phone +46(0)491761800 • Fax +46(0)49181900

BE - GE Establ. 1934	Parts Replacements List **631625 Slim cover kit RIGHT** **Controls left, buckle left** **3000, 3100, 3400**	Doc. R1-631625 Date 090101 Rev.
	Valid from 090101 to	Rev.Date

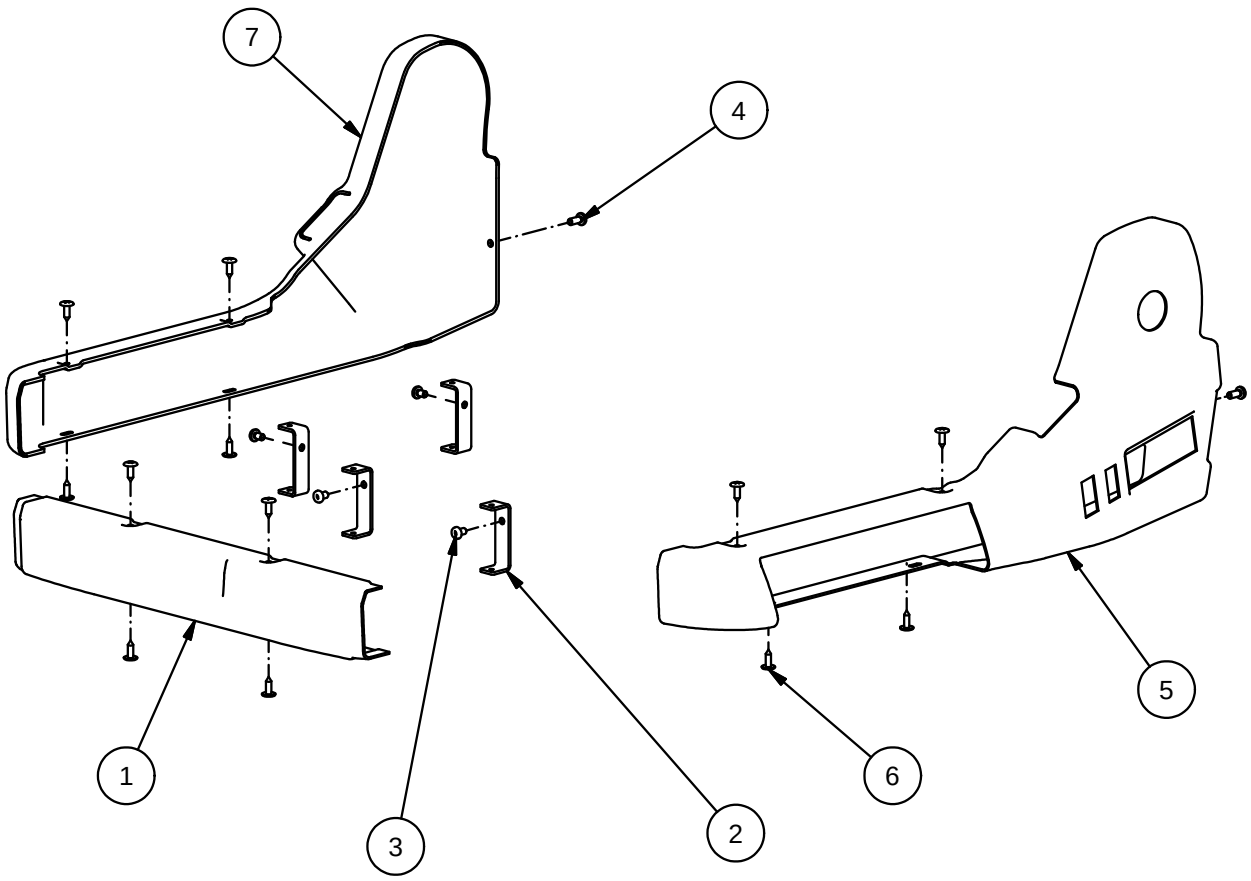

Fig.	Part. No.	Quantity	Description		
1	631102	1	FRONT COVER		
2	631062	4	BRACKET, COVER		
3	650088	4	SCREW MRT-TT	M5x8	ISO7045 ZN
4	650126	2	SCREW MRT-TT	M5x12	ISO7045 ZN BLACK
5	631097	1	SIDE COVER W CONTROLS		
6	650118	12	SCREW MONTAGE	4.2x14	BLACK PAINTED
7	631502	1	SIDE COVER SLIM, RIGHT		

Be-Ge Industri AB • Box 912 • S-572 29 Oskarshamn • Sweden • Phone +46(0)491761800 • Fax +46(0)49181900

BE - GE Establ. 1934	Parts Replacements List **631305 Seat plate kit** **3000, 3100, 3400**	Doc. R1-631305 Date 071105 Rev. 1
	Valid from 070601 to	Rev.Date 110516

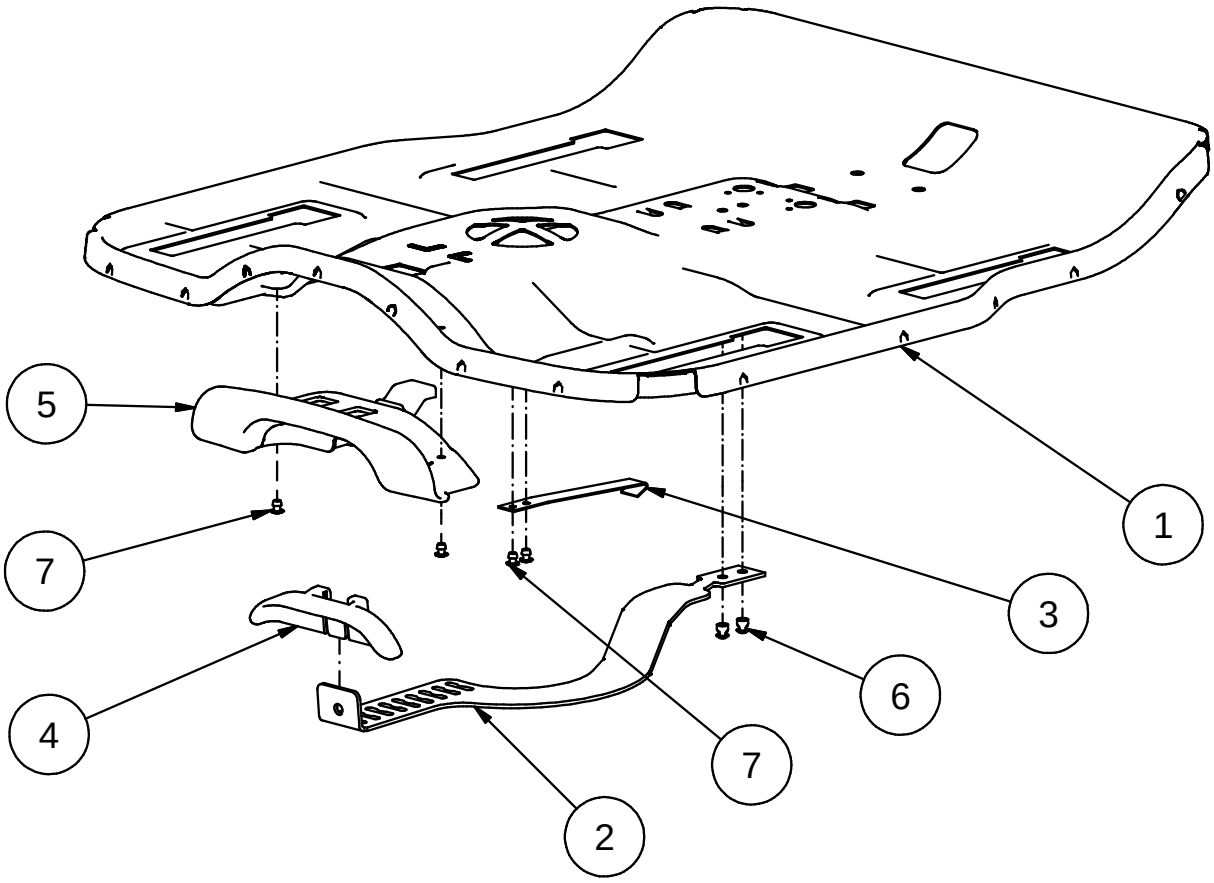

Fig.	Part. No.	Quantity	Description		
1	631009	1	SEAT PLATE		
2	631041	1	INDEXING BRACKET		
3	631059	1	SPRING,STOP CUSHION ADJ		
4	631721	1	HANDLE, SEAT CUSHION ADJ		
5	631720	1	COVER, SEAT CUSHION ADJ		
6	416022	2	RIVET AL/ST	4.8x9.5	SP/D BS
7	653004	4	RIVET AL/ST	3.2x6	AP/D BS

Be-Ge Industri AB • Box 912 • S-572 29 Oskarshamn • Sweden • Phone +46(0)491761800 • Fax +46(0)49181900

BE - GE Establ. 1934	Parts Replacements List **631145 Protection bellow** **3000, 3100, 3400**	Doc. R1-631145 Date 071105 Rev.
	Valid from 070601 to	Rev.Date

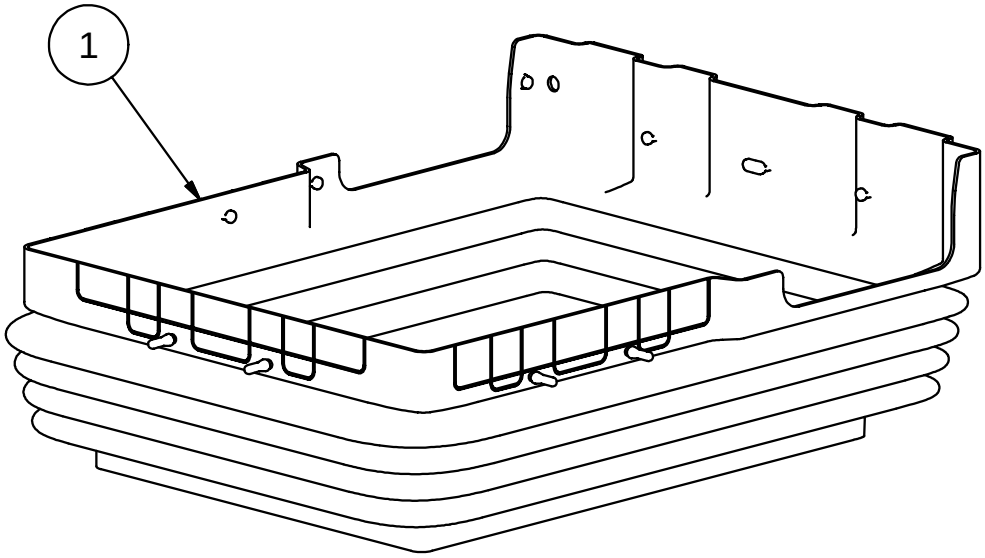

Fig.	Part. No.	Quantity	Description		
1	631145	1	PROTECTION BELLOW		

Be-Ge Industri AB • Box 912 • S-572 29 Oskarshamn • Sweden • Phone +46(0)491761800 • Fax +46(0)49181900

BE - GE Establ. 1934	Parts Replacements List **631309 Backrest kit** **High backrest, 3-point safety belt** **3000, 3100, 3400**	Doc. R1-631309 Date 071105 Rev.
	Valid from 070601 to	Rev.Date

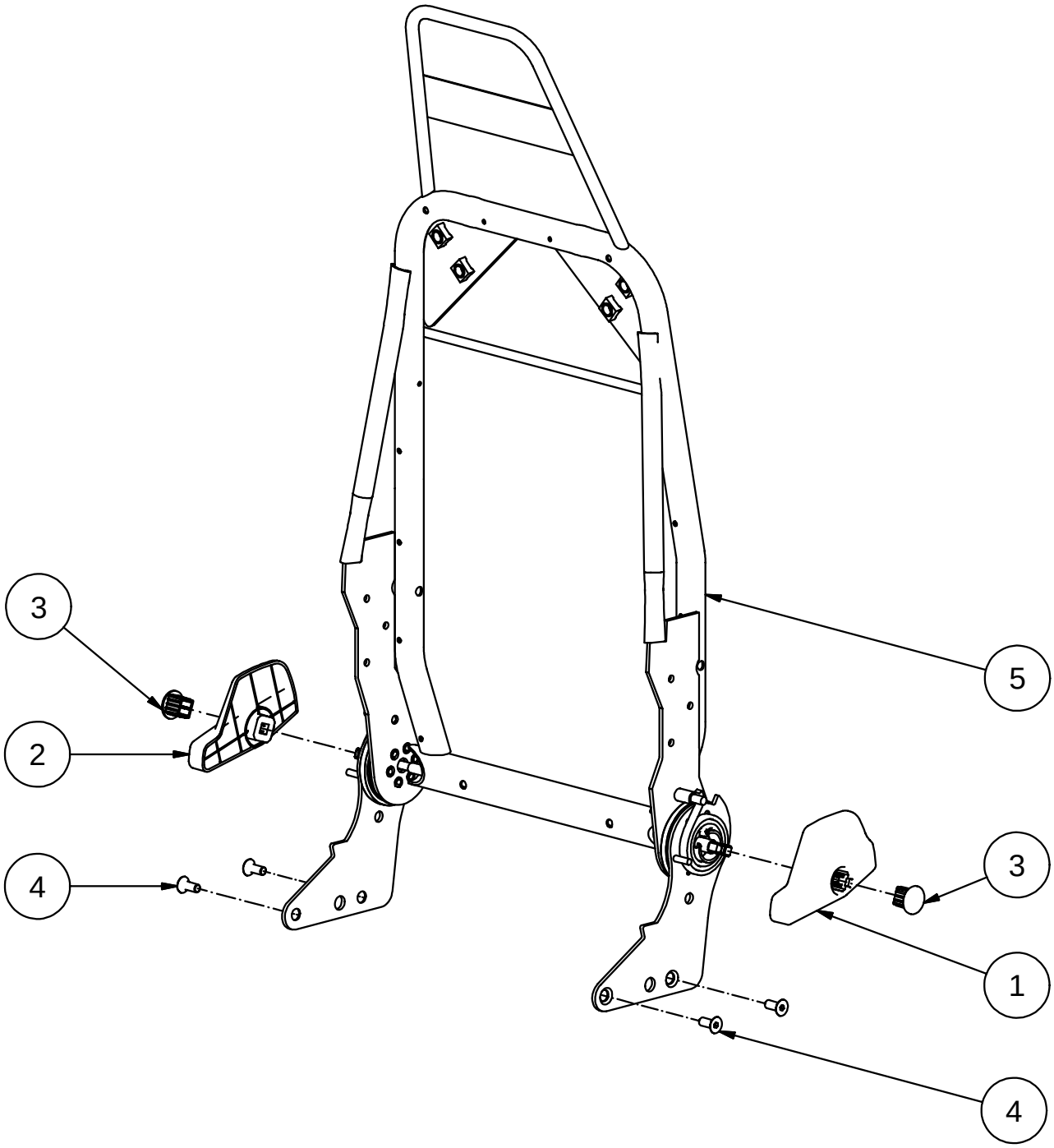

Fig.	Part. No.	Quantity	Description		
1	631010	1	CONTROL LEVER		
2	631011	1	CONTROL LEVER		
3	628834	2	CAP GRIP		
4	310930	4	SCREW MF6S	M8x20	DIN7991 ZN-BL 10.9
5	631103	1	BACKREST HIGH WELDED 3P		

Be-Ge Industri AB • Box 912 • S-572 29 Oskarshamn • Sweden • Phone +46(0)491761800 • Fax +46(0)49181900

BE - GE Establ. 1934	Parts Replacements List **631311 Backrest kit** **Backrest 640, 3-point safety belt** **3000, 3100, 3400**	Doc. R1-631311 Date 071105 Rev.
	Valid from 070601 to	Rev.Date

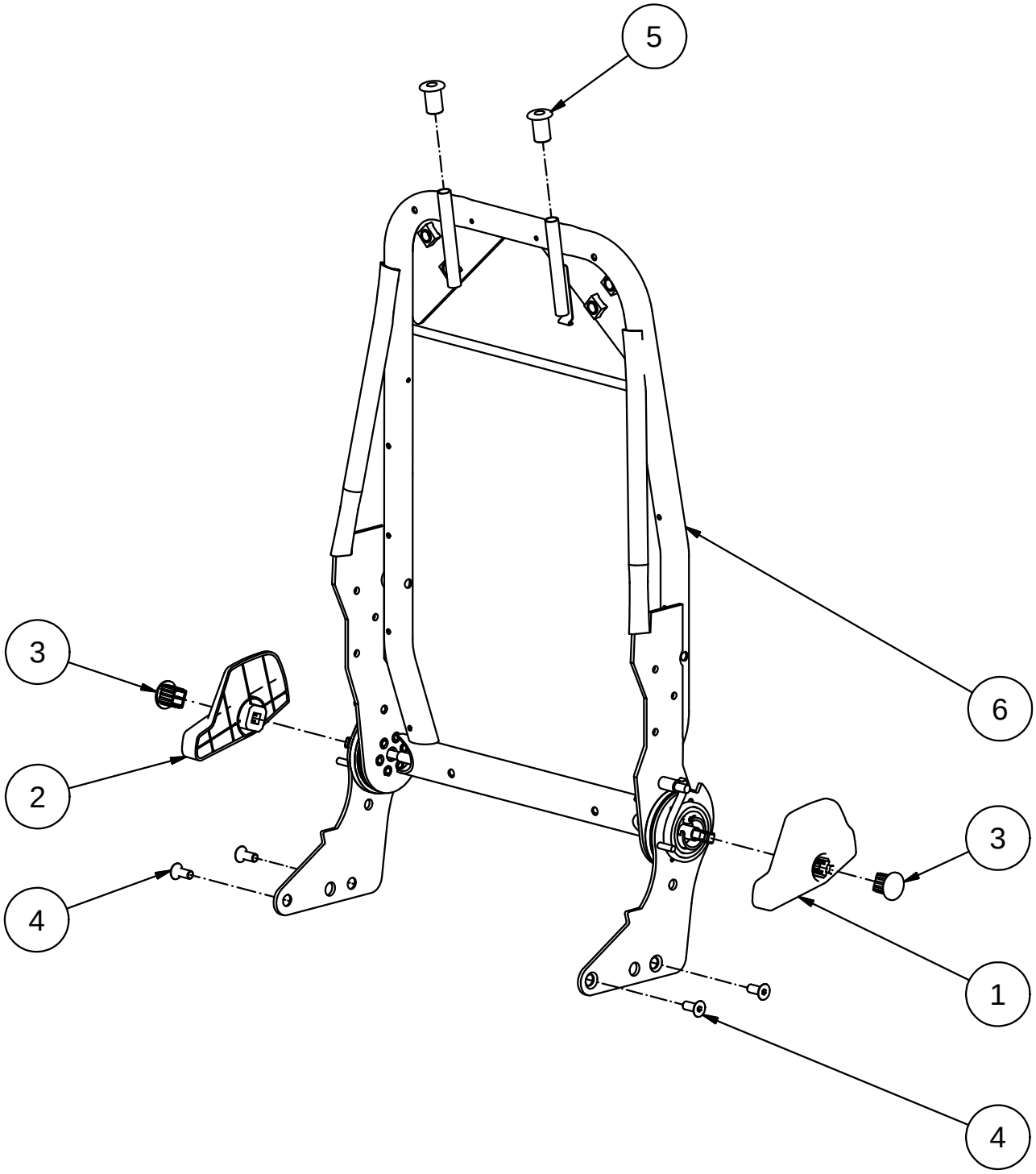

Fig.	Part. No.	Quantity	Description		
1	631010	1	CONTROL LEVER		
2	631011	1	CONTROL LEVER		
3	628834	2	CAP GRIP		
4	310930	4	SCREW MF6S	M8x20	DIN7991 ZN-BL 10.9
5	621514	2	COVER PLUG		
6	631198	1	BACKREST LOW WELDED 3P		

Be-Ge Industri AB • Box 912 • S-572 29 Oskarshamn • Sweden • Phone +46(0)491761800 • Fax +46(0)49181900

BE - GE Establ. 1934	Parts Replacements List **631386 Backrest support kit** **Lumbar support (Mechanical)** **3400**	Doc. R1-631386 Date 071105 Rev. 2
	Valid from 070601 to	Rev.Date 110101

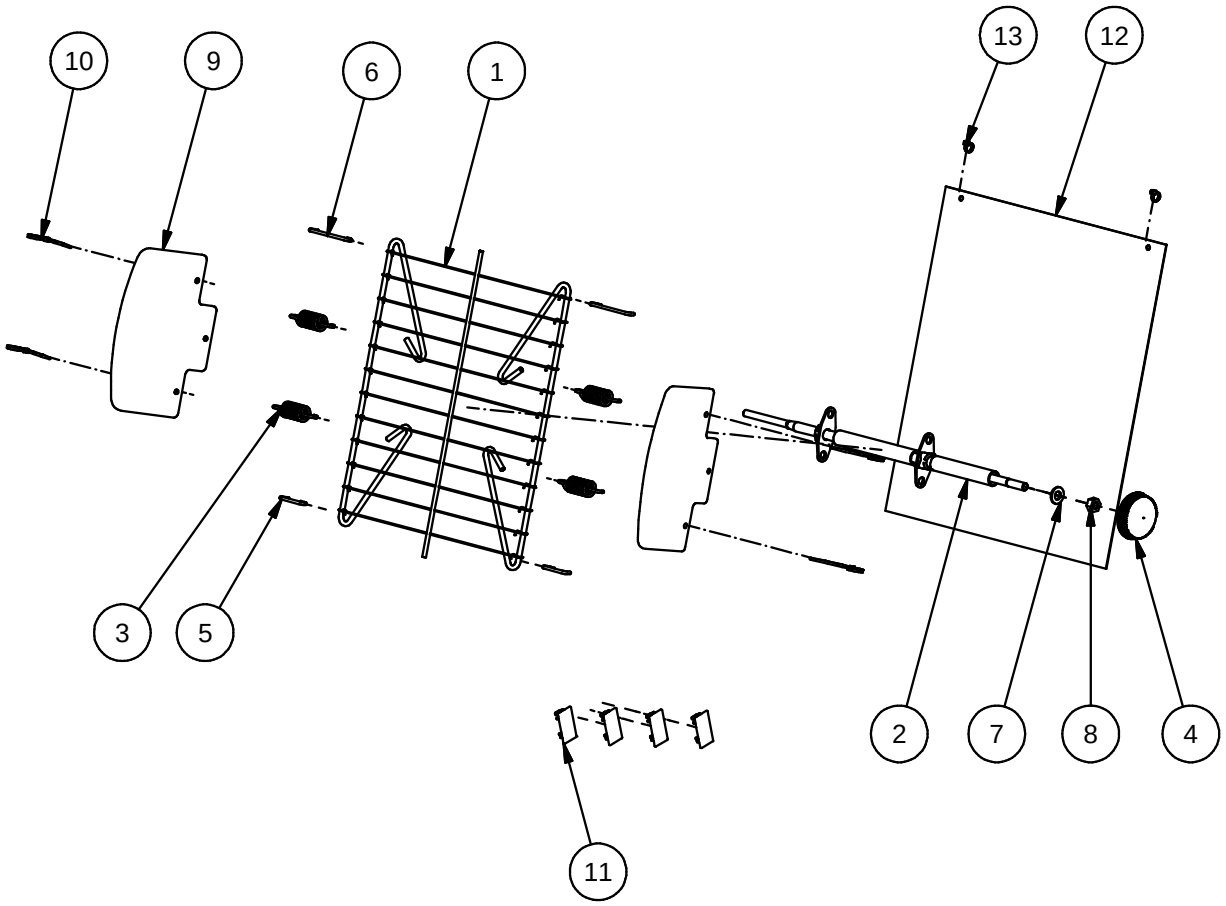

Fig.	Part. No.	Quantity	Description		
1	620413	1	LUMBAR SUPPORT		
2	500387	1	AXLE LUMBAR SUPPORT		
3	620072	4	SPRING		
4	500279	1	HANDWHEEL M8		
5	631172	2	HITCH		
6	622211	2	UPPER LINK		LUMBAR SUPPORT
7	500268	1	WASHER SRB	9x18x1.5	ISO7091 ZN BLACK
8	651011	1	NUT M6M	M8	DIN934 ZN BL. K8
9	631121	2	PLATE SIDE SUPPORT		
10	470109	4	CABLE TIE	3.5x200	BLACK
11	631226	4	COVER, VALVE		
12	631742	1	COVER BACKREST		
13	660109	2	CABLE TIE		

Be-Ge Industri AB • Box 912 • S-572 29 Oskarshamn • Sweden • Phone +46(0)491761800 • Fax +46(0)49181900

BE - GE Establ. 1934	Parts Replacements List **631387 Backrest support kit** **Lumbar support** **3000, 3100**	Doc. R1-631387 Date 071105 Rev. 2
	Valid from 070601 to	Rev.Date 110101

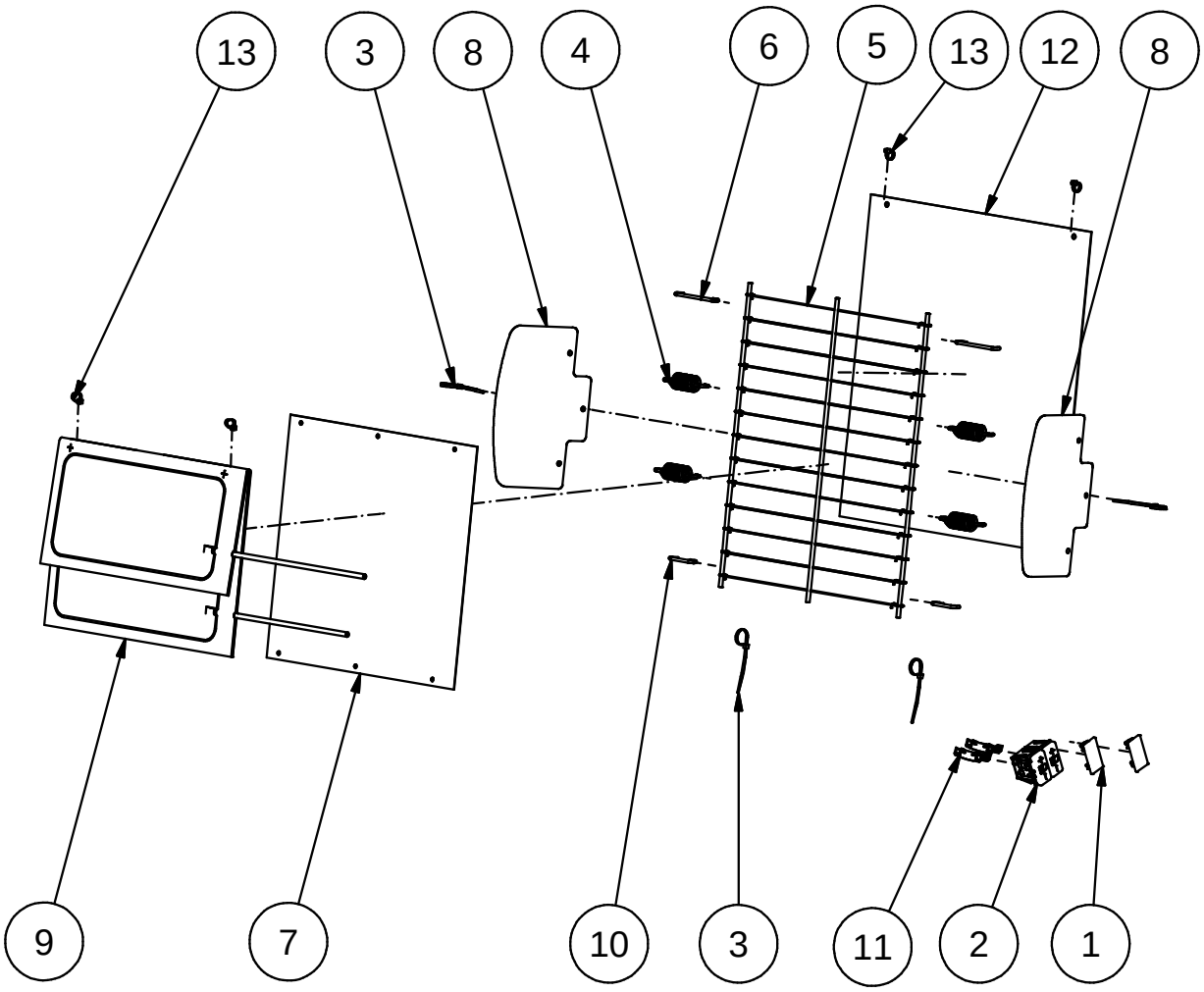

Fig.	Part. No.	Quantity	Description		
1	631226	2	COVER, VALVE		
2	622651	1	VALVE		
3	470109	4	CABLE TIE	3.5x200	BLACK
4	620072	4	SPRING		
5	620148	1	PULLMAFLEX MAT STRAIGHT		
6	622211	2	UPPER LINK		LUMBAR SUPPORT
7	622656	1	PLASTIC PLATE		
8	631121	2	PLATE SIDE SUPPORT		
9	631125	1	BLADDER, LUMBAR SUPPORT		
10	631172	2	HITCH		
11	631475	2	TUBE ELBOW Ø6, 90°		
12	631742	1	COVER BACKREST		
13	660109	4	CABLE TIE		

Be-Ge Industri AB • Box 912 • S-572 29 Oskarshamn • Sweden • Phone +46(0)491761800 • Fax +46(0)49181900

BE - GE Establ. 1934	Parts Replacements List **631388 Backrest support kit** **Lumbar and side support** **3000, 3100**	Doc. R1-631388 Date 071105 Rev. 2
	Valid from 070601 to	Rev.Date 110101

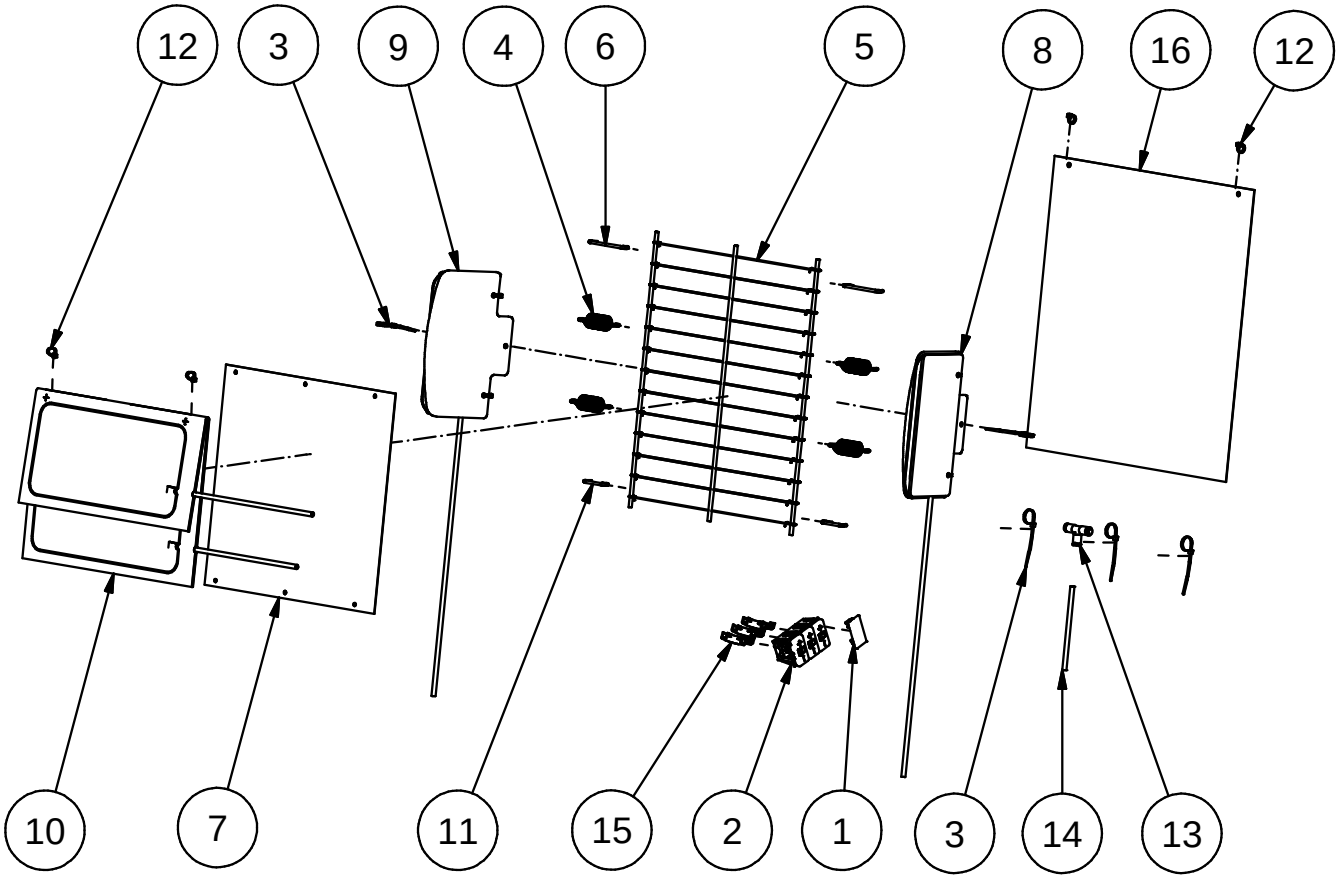

Fig.	Part. No.	Quantity	Description		
1	631226	1	COVER, VALVE		
2	622815	1	VENTIL		
3	470109	5	CABLE TIE	3.5x200	BLACK
4	620072	4	SPRING		
5	620148	1	PULLMAFLEX MAT STRAIGHT		
6	622211	2	UPPER LINK		LUMBAR SUPPORT
7	622656	1	PLASTIC PLATE		
8	631123	1	SIDE SUPPORT ASM		
9	631124	1	SIDE SUPPORT ASM		
10	631125	1	BLADDER, LUMBAR SUPPORT		
11	631172	2	HITCH		
12	660109	4	CABLE TIE		
13	660550	1	ONE TOUCH FITTNING	5 mm	TEE
14	660551	1	TUBE	5x3.1	WHITE (PUR)
15	631475	3	TUBE ELBOW Ø6, 90°		
16	631742	1	COVER BACKREST		

Be-Ge Industri AB • Box 912 • S-572 29 Oskarshamn • Sweden • Phone +46(0)491761800 • Fax +46(0)49181900

BE - GE Establ. 1934	Parts Replacements List **631389 Backrest support kit** **Lumbar, side and shoulder support** **3000, 3100**	Doc. R1-631389 Date 071105 Rev. 2
	Valid from 070601 to	Rev.Date 110101

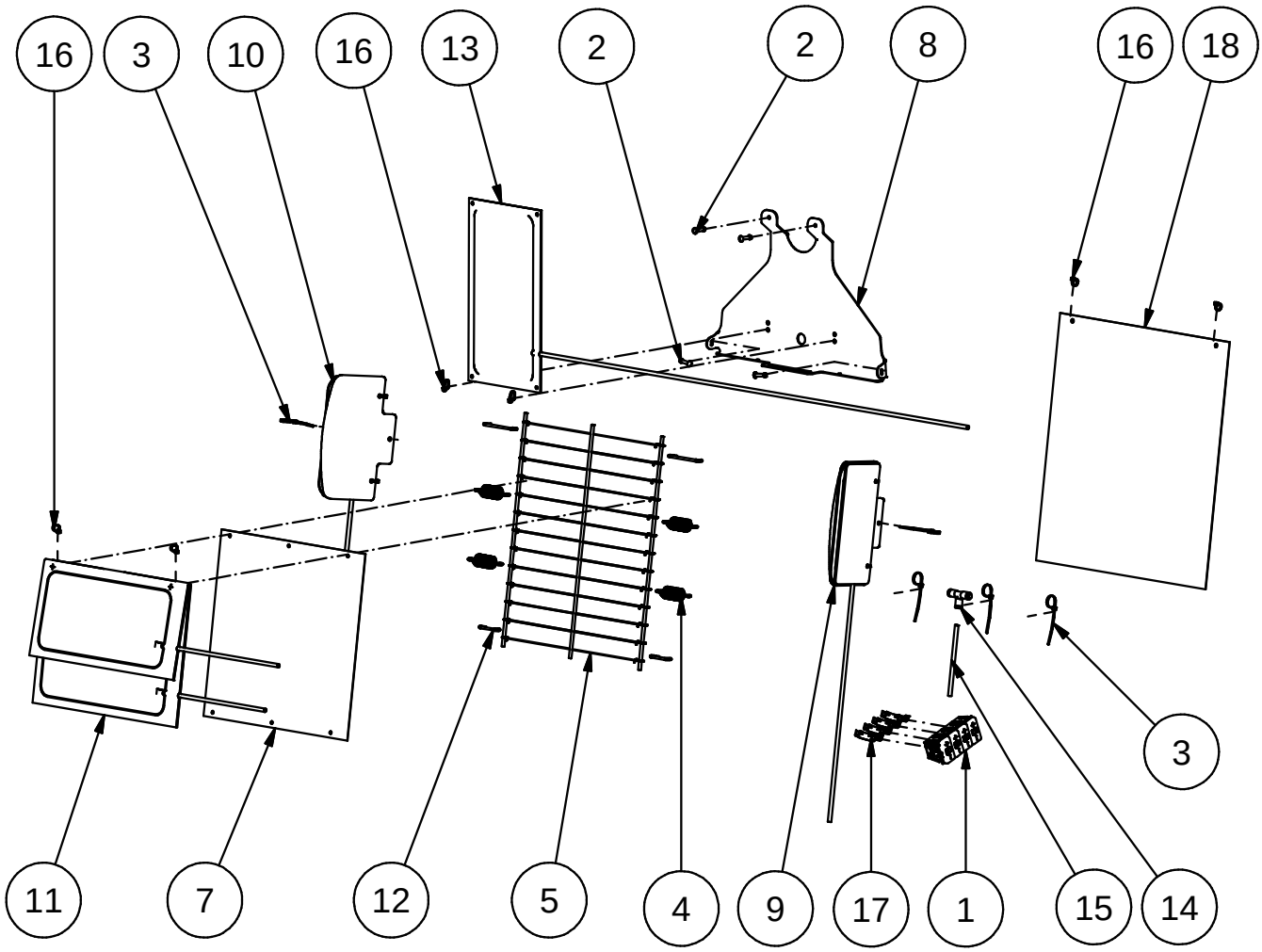

Fig.	Part. No.	Quantity	Description		
1	631132	2	VALVE		
2	500221	4	RIVET ST/ST	4.0x16	SP/D BS
3	470109	5	CABLE TIE	3.5x200	BLACK
4	620072	4	SPRING		
5	620148	1	PULLMAFLEX MAT STRAIGHT		
6	622211	2	UPPER LINK		LUMBAR SUPPORT
7	622656	1	PLASTIC PLATE		
8	631119	1	PLATE, SHOULDER ADJ		
9	631123	1	SIDE SUPPORT ASM		
10	631124	1	SIDE SUPPORT ASM		
11	631125	1	BLADDER, LUMBAR SUPPORT		
12	631172	2	HITCH		
13	631426	1	BLADDER SHOULDERSUPPORT		
14	660550	1	ONE TOUCH FITTNING	5 mm	TEE
15	660551	1	TUBE	5x3.1	WHITE (PUR)
16	660109	6	CABLE TIE		
17	631475	4	TUBE ELBOW Ø6, 90°		
18	631742	1	COVER BACKREST		

Be-Ge Industri AB • Box 912 • S-572 29 Oskarshamn • Sweden • Phone +46(0)491761800 • Fax +46(0)49181900

BE - GE Establ. 1934	Parts Replacements List **631589 Backrest support kit** **Lumbar support** **3000, 3100 Built-in compressor**	Doc. R1-631589 Date 090101 Rev. 1
	Valid from 090101 to	Rev.Date 110101

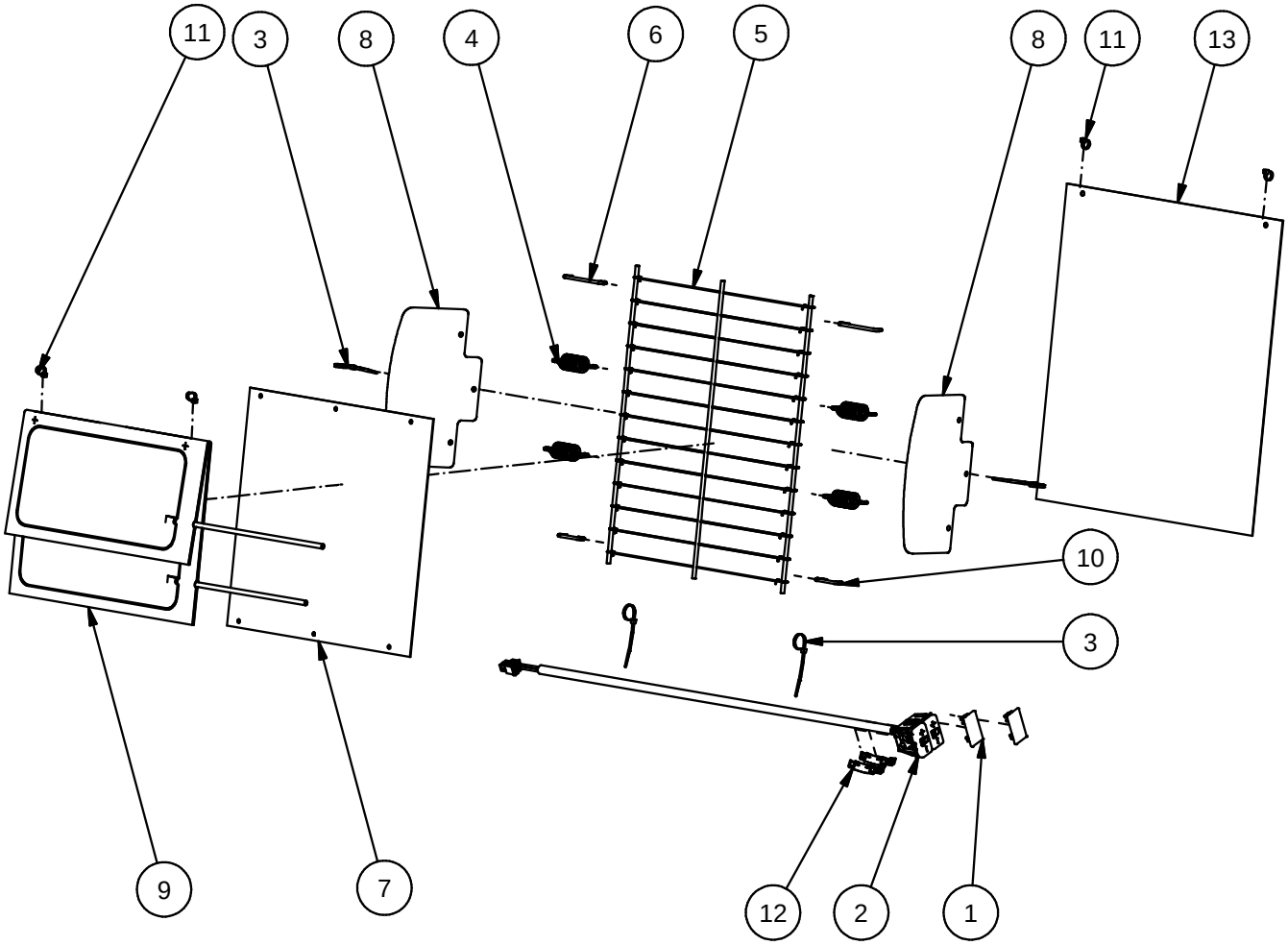

Fig.	Part. No.	Quantity	Description		
1	631226	2	COVER, VALVE		
2	631506	1	VALVE MICRO SWITCH, DOUBLE		
3	470109	4	CABLE TIE	3.5x200	BLACK
4	620072	4	SPRING		
5	620148	1	PULLMAFLEX MAT STRAIGHT		
6	622211	2	UPPER LINK		LUMBAR SUPPORT
7	622656	1	PLASTIC PLATE		
8	631121	2	PLATE SIDE SUPPORT		
9	631125	1	BLADDER, LUMBAR SUPPORT		
10	631172	2	HITCH		
11	660109	4	CABLE TIE		
12	631475	2	TUBE ELBOW Ø6, 90°		
13	631742	1	COVER BACKREST		

Be-Ge Industri AB • Box 912 • S-572 29 Oskarshamn • Sweden • Phone +46(0)491761800 • Fax +46(0)49181900

BE - GE Establ. 1934	Parts Replacements List **631590 Backrest support kit** **Lumbar and side support** **3000, 3100 Built-in compressor**	Doc. R1-631590 Date 090101 Rev. 1
	Valid from 090101 to	Rev.Date 110101

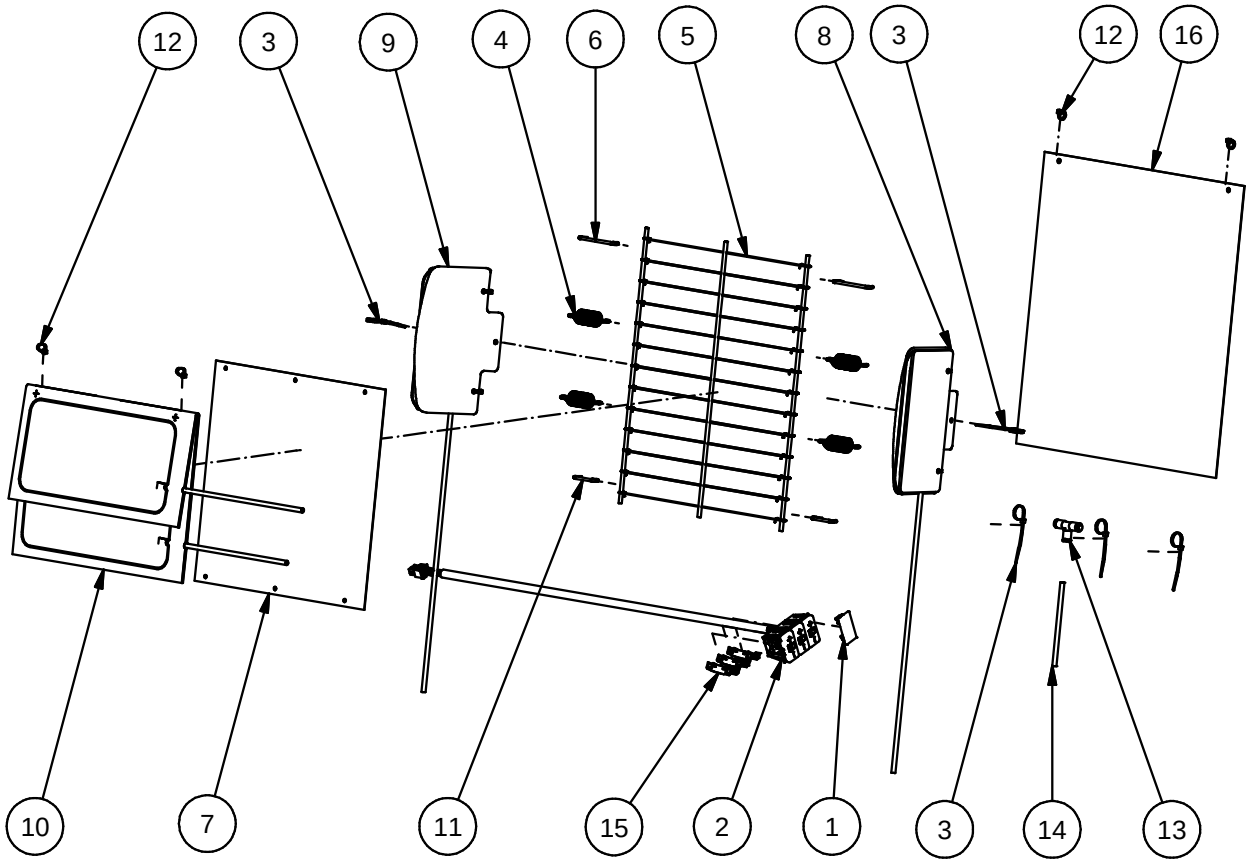

Fig.	Part. No.	Quantity	Description		
1	631226	1	COVER, VALVE		
2	631507	1	VALVE MICRO SWITCH, TRIPLE		
3	470109	5	CABLE TIE	3.5x200	BLACK
4	620072	4	SPRING		
5	620148	1	PULLMAFLEX MAT STRAIGHT		
6	622211	2	UPPER LINK		LUMBAR SUPPORT
7	622656	1	PLASTIC PLATE		
8	631123	1	SIDE SUPPORT ASM		
9	631124	1	SIDE SUPPORT ASM		
10	631125	1	BLADDER, LUMBAR SUPPORT		
11	631172	2	HITCH		
12	660109	4	CABLE TIE		
13	660550	1	ONE TOUCH FITTNING	5 mm	TEE
14	660551	1	TUBE	5x3.1	WHITE (PUR)
15	631475	3	TUBE ELBOW Ø6, 90°		
16	631742	1	COVER BACKREST		

Be-Ge Industri AB • Box 912 • S-572 29 Oskarshamn • Sweden • Phone +46(0)491761800 • Fax +46(0)49181900

BE - GE Establ. 1934	Parts Replacements List **631591 Backrest support kit** **Lumbar, side and shoulder support** **3000, 3100 Built-in compressor**	Doc. R1-631591 Date 090101 Rev. 1
	Valid from 090101 to	Rev.Date 110101

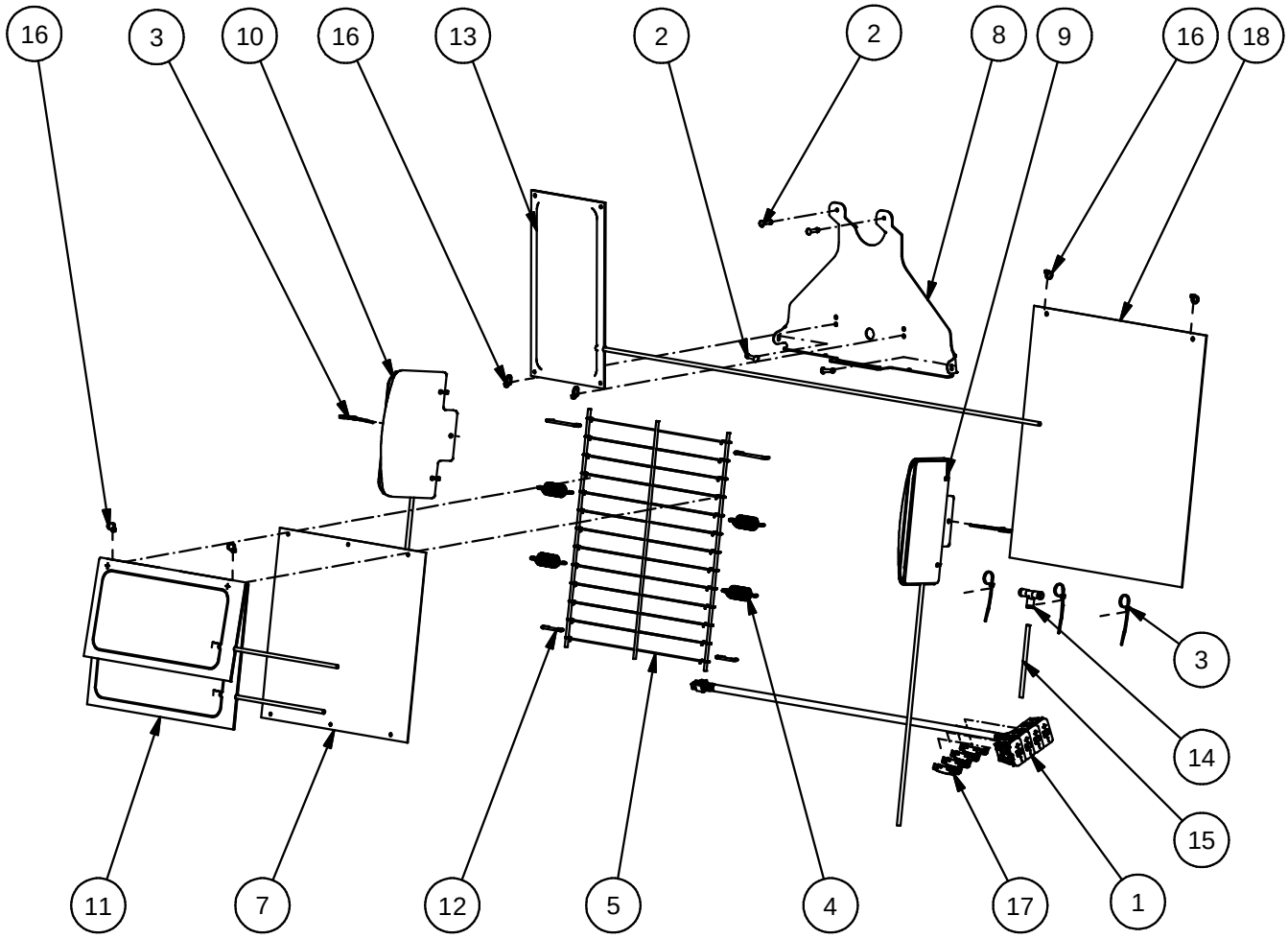

Fig.	Part. No.	Quantity	Description		
1	631516	2	VALVE MICRO SWITCH, QUAD		
2	500221	4	RIVET ST/ST	4.0x16	SP/D BS
3	470109	5	CABLE TIE	3.5x200	BLACK
4	620072	4	SPRING		
5	620148	1	PULLMAFLEX MAT STRAIGHT		
6	622211	2	UPPER LINK		LUMBAR SUPPORT
7	622656	1	PLASTIC PLATE		
8	631119	1	PLATE, SHOULDER ADJ		
9	631123	1	SIDE SUPPORT ASM		
10	631124	1	SIDE SUPPORT ASM		
11	631125	1	BLADDER, LUMBAR SUPPORT		
12	631172	2	HITCH		
13	631426	1	BLADDER SHOULDERSUPPORT		
14	660550	1	ONE TOUCH FITTNING	5 mm	TEE
15	660551	1	TUBE	5x3.1	WHITE (PUR)
16	660109	6	CABLE TIE		
17	631475	4	TUBE ELBOW Ø6, 90°		
18	631742	1	COVER BACKREST		

Be-Ge Industri AB • Box 912 • S-572 29 Oskarshamn • Sweden • Phone +46(0)491761800 • Fax +46(0)49181900

BE - GE Establ. 1934	Parts Replacements List **631598 Backrest support kit XSS** **Lumbar support** **3000, 3100**	Doc. R1-631598 Date 090101 Rev. 1
	Valid from 090101 to	Rev.Date 110101

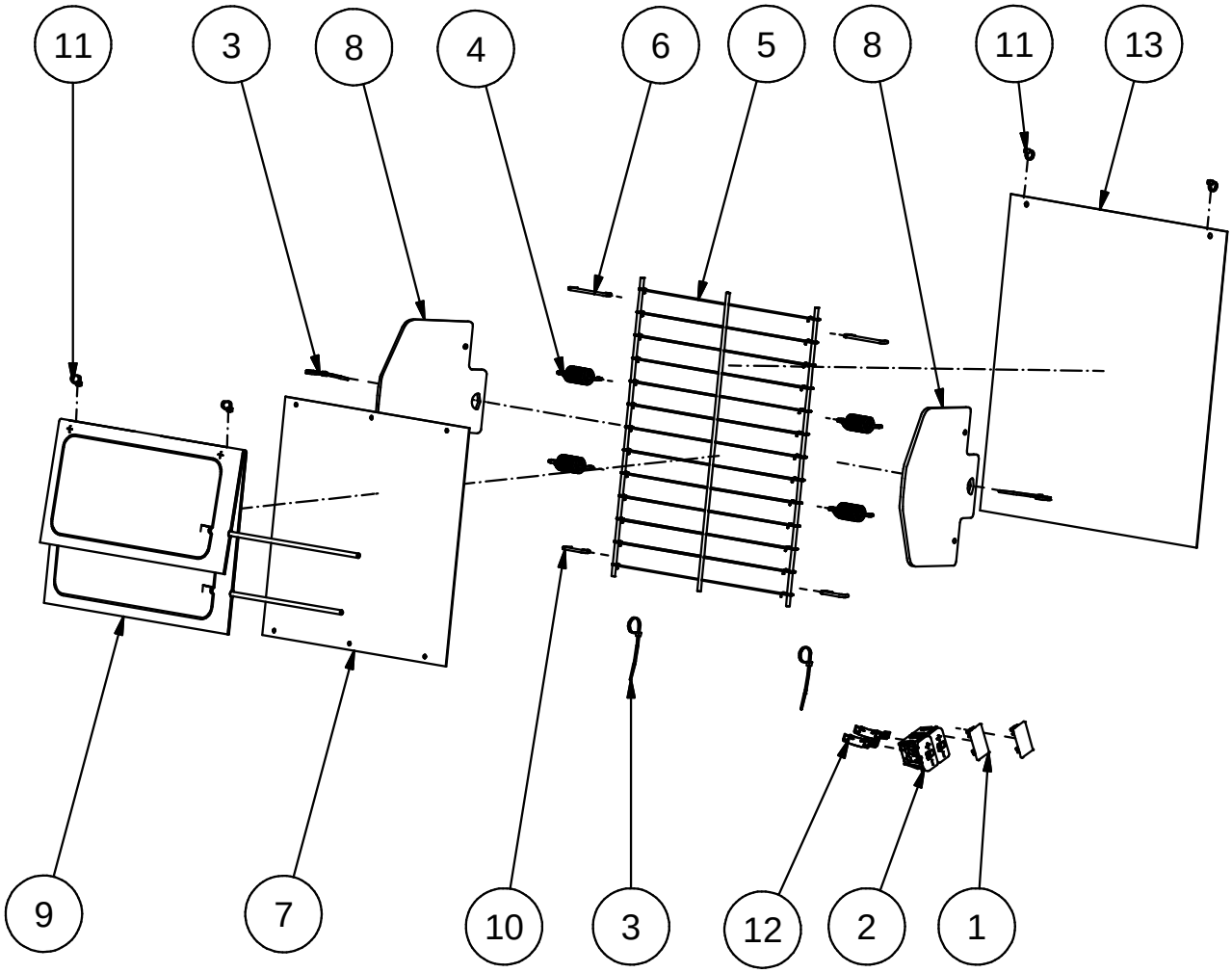

Fig.	Part. No.	Quantity	Description		
1	631226	2	COVER, VALVE		
2	622651	1	VALVE		
3	470109	4	CABLE TIE	3.5x200	BLACK
4	620072	4	SPRING		
5	620148	1	PULLMAFLEX MAT STRAIGHT		
6	622211	2	UPPER LINK		LUMBAR SUPPORT
7	622656	1	PLASTIC PLATE		
8	631455	2	PLATE SIDE SUPPORT XSS		
9	631125	1	BLADDER, LUMBAR SUPPORT		
10	631172	2	HITCH		
11	660109	4	CABLE TIE		
12	631475	2	TUBE ELBOW Ø6, 90°		
13	631742	1	COVER BACKREST		

Be-Ge Industri AB • Box 912 • S-572 29 Oskarshamn • Sweden • Phone +46(0)491761800 • Fax +46(0)49181900

BE - GE Establ. 1934	Parts Replacements List **631599 Backrest support kit XSS** **Lumbar and side support** **3000, 3100**	Doc. R1-631599 Date 090101 Rev. 1
	Valid from 090101 to	Rev.Date 110101

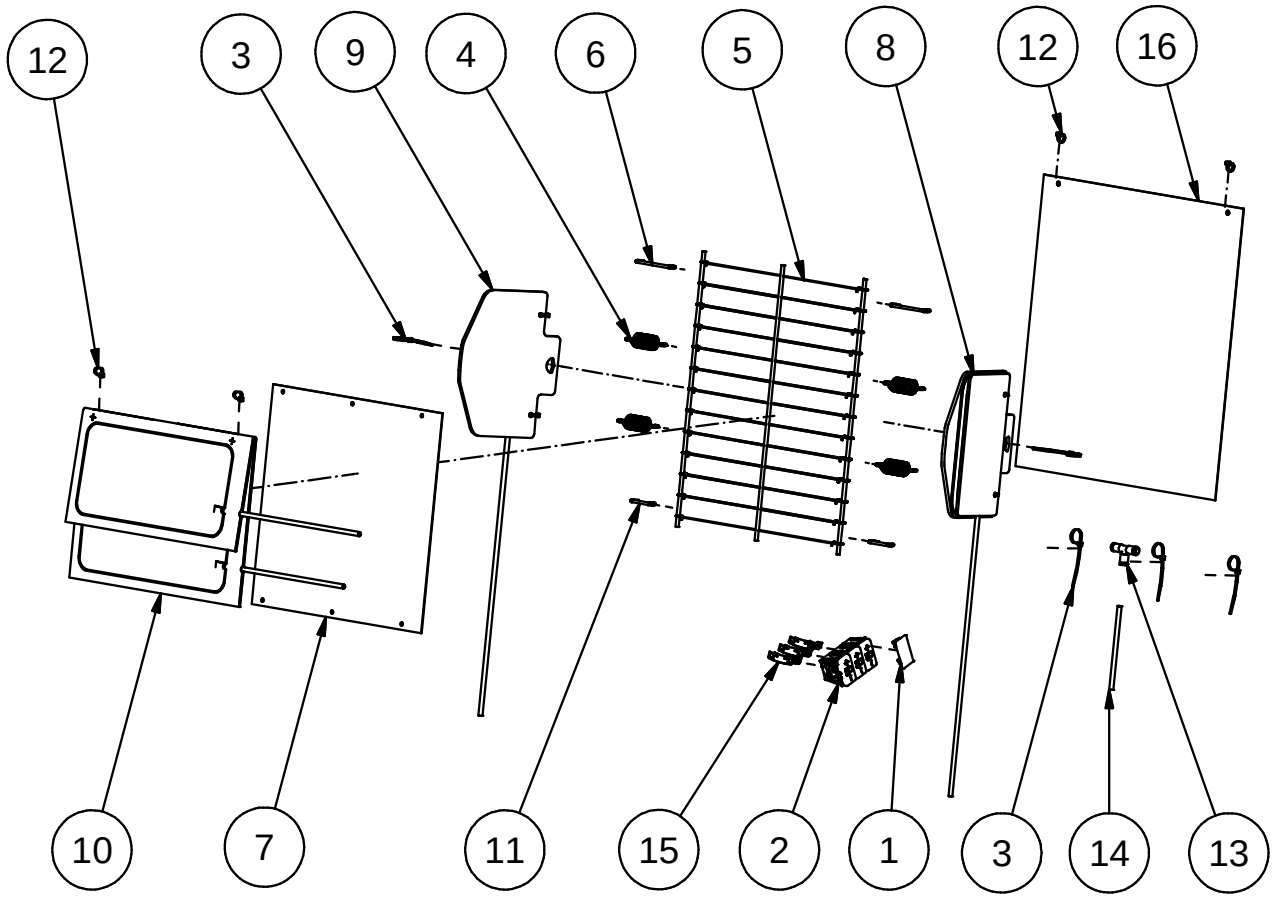

Fig.	Part. No.	Quantity	Description		
1	631226	1	COVER, VALVE		
2	622815	1	VENTIL		
3	470109	5	CABLE TIE	3.5x200	BLACK
4	620072	4	SPRING		
5	620148	1	PULLMAFLEX MAT STRAIGHT		
6	622211	2	UPPER LINK		LUMBAR SUPPORT
7	622656	1	PLASTIC PLATE		
8	631456	1	SIDE SUPPORT XSS		LEFT
9	631457	1	SIDE SUPPORT XSS		RIGHT
10	631125	1	BLADDER, LUMBAR SUPPORT		
11	631172	2	HITCH		
12	660109	4	CABLE TIE		
13	660550	1	ONE TOUCH FITTNING	5 mm	TEE
14	660551	1	TUBE	5x3.1	WHITE (PUR)
15	631475	3	TUBE ELBOW Ø6, 90°		
16	631742	1	COVER BACKREST		

Be-Ge Industri AB • Box 912 • S-572 29 Oskarshamn • Sweden • Phone +46(0)491761800 • Fax +46(0)49181900

BE - GE Establ. 1934	Parts Replacements List **631601 Backrest support kit XSS** **Lumbar support** **3000, 3100 Built-in compressor**	Doc. R1-631601 Date 090101 Rev. 1
	Valid from 090101 to	Rev.Date 110101

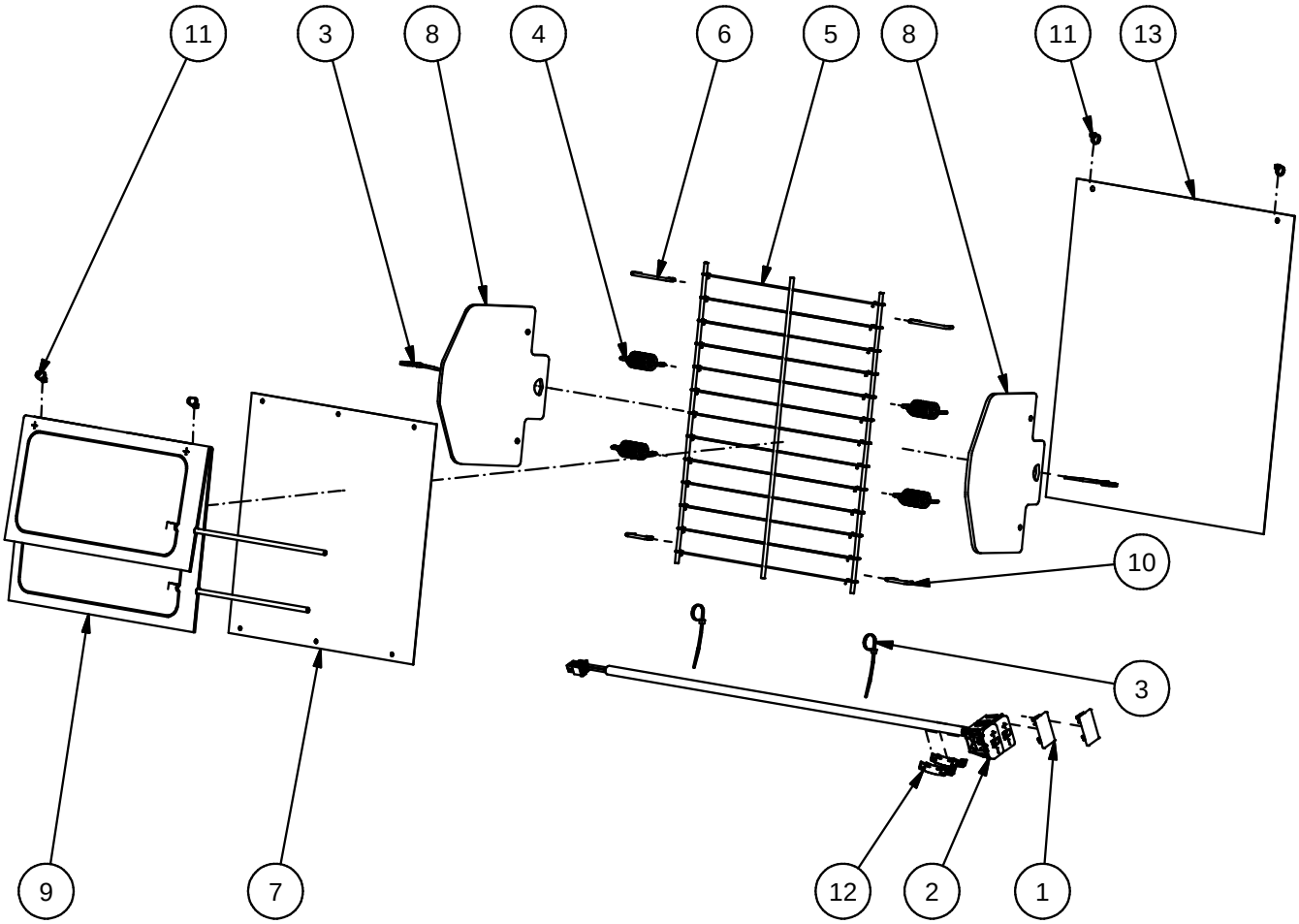

Fig.	Part. No.	Quantity	Description		
1	631226	2	COVER, VALVE		
2	631506	1	VALVE MICRO SWITCH, DOUBLE		
3	470109	4	CABLE TIE	3.5x200	BLACK
4	620072	4	SPRING		
5	620148	1	PULLMAFLEX MAT STRAIGHT		
6	622211	2	UPPER LINK		LUMBAR SUPPORT
7	622656	1	PLASTIC PLATE		
8	631455	2	PLATE SIDE SUPPORT XSS		
9	631125	1	BLADDER, LUMBAR SUPPORT		
10	631172	2	HITCH		
11	660109	4	CABLE TIE		
12	631475	2	TUBE ELBOW Ø6, 90°		
13	631742	1	COVER BACKREST		

Be-Ge Industri AB • Box 912 • S-572 29 Oskarshamn • Sweden • Phone +46(0)491761800 • Fax +46(0)49181900

BE - GE Establ. 1934	Parts Replacements List **631602 Backrest support kit XSS** **Lumbar and side support** **3000, 3100 Built-in compressor**	Doc. R1-631602 Date 090101 Rev. 1
	Valid from 090101 to	Rev.Date 110101

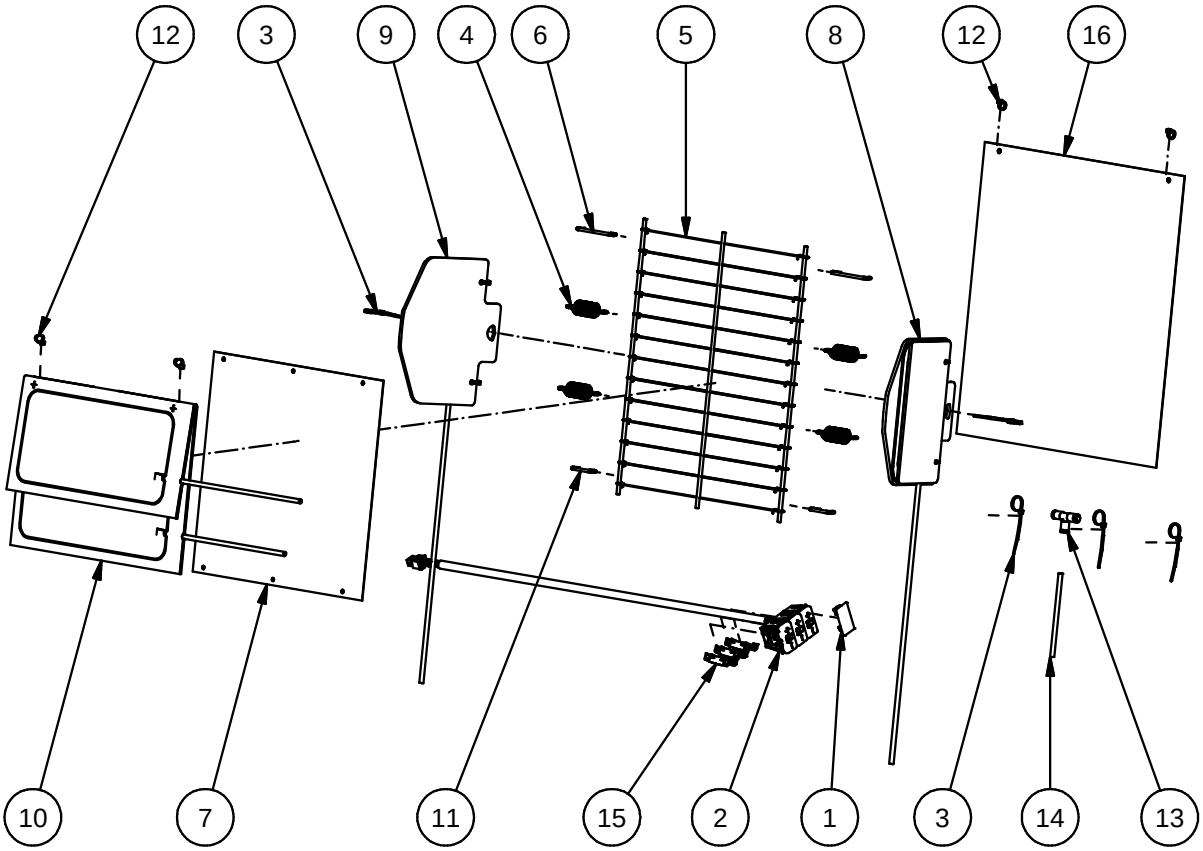

Fig.	Part. No.	Quantity	Description		
1	631226	1	COVER, VALVE		
2	631507	1	VALVE MICRO SWITCH, TRIPLE		
3	470109	5	CABLE TIE	3.5x200	BLACK
4	620072	4	SPRING		
5	620148	1	PULLMAFLEX MAT STRAIGHT		
6	622211	2	UPPER LINK		LUMBAR SUPPORT
7	622656	1	PLASTIC PLATE		
8	631456	1	SIDE SUPPORT XSS		LEFT
9	631457	1	SIDE SUPPORT XSS		RIGHT
10	631125	1	BLADDER, LUMBAR SUPPORT		
11	631172	2	HITCH		
12	660109	4	CABLE TIE		
13	660550	1	ONE TOUCH FITTNING	5 mm	TEE
14	660551	1	TUBE	5x3.1	WHITE (PUR)
15	631475	3	TUBE ELBOW Ø6, 90°		
16	631742	1	COVER BACKREST		

Be-Ge Industri AB • Box 912 • S-572 29 Oskarshamn • Sweden • Phone +46(0)491761800 • Fax +46(0)49181900

BE - GE Establ. 1934	Parts Replacements List **631815 Safety belt kit** **2P LEFT/RIGHT** **3800, 3900**	Doc. R1-631815 Date 110411 Rev. 1
	Valid from 110411 to	Rev.Date 110908

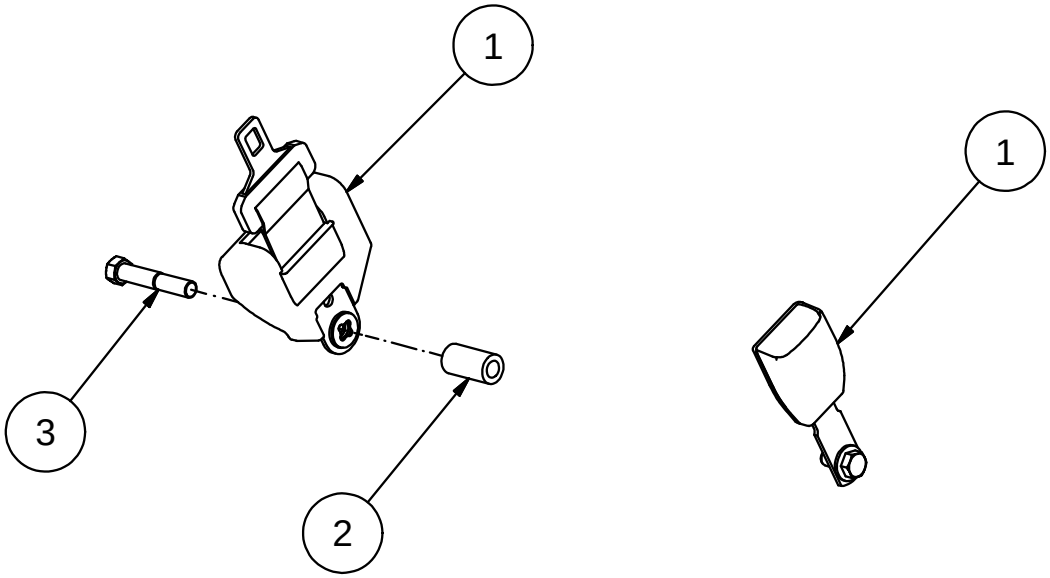

Fig.	Part. No.	Quantity	Description		
1	629393	1	SAFETY BELT 2P		
2	631436	1	SPACER 2-POINT BELT		
3	650143	1	BOLT U6S UNF	7/16x64	ZN YELLOW 8.8

Be-Ge Industri AB • Box 912 • S-572 29 Oskarshamn • Sweden • Phone +46(0)491761800 • Fax +46(0)49181900

BE - GE Establ. 1934	Parts Replacements List **631382 Cable harness kit** **3000, 3100**	Doc. R1-631382 Date 071105 Rev. 1
	Valid from 070601 to	Rev.Date 110301

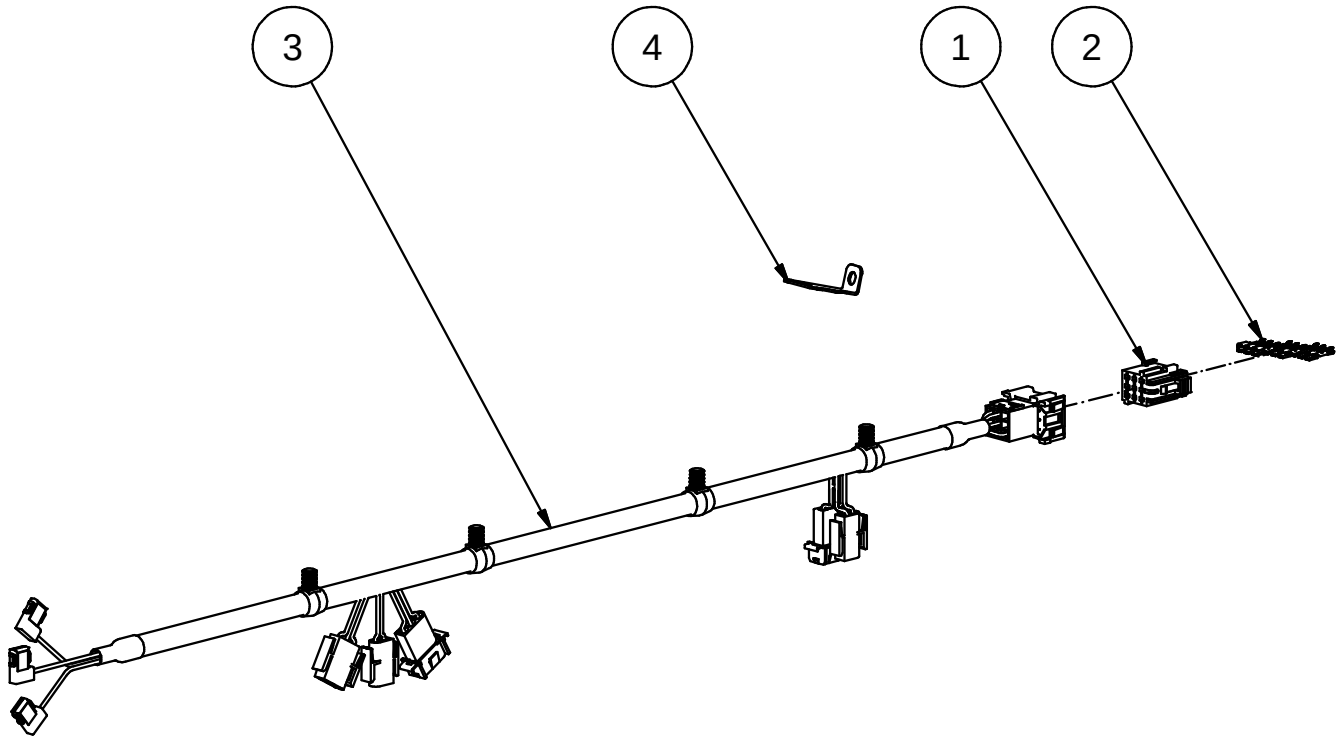

Fig.	Part. No.	Quantity	Description		
1	660615	1	HOUSING JPT	9 POS	AMP 1-967621-1
2	660616	9	CONTACT JPT		AMP 927768-3
3	631758	1	CABLE HARNESS STD		
4	631765	1	BRACKET, CABLE HARNESS		

Be-Ge Industri AB • Box 912 • S-572 29 Oskarshamn • Sweden • Phone +46(0)491761800 • Fax +46(0)49181900

BE - GE Establ. 1934	Parts Replacements List **631383 Seat heater kit** **12/24 volt** **3000, 3100, 3400**	Doc. R1-631383 Date 071105 Rev.
	Valid from 070601 to	Rev.Date

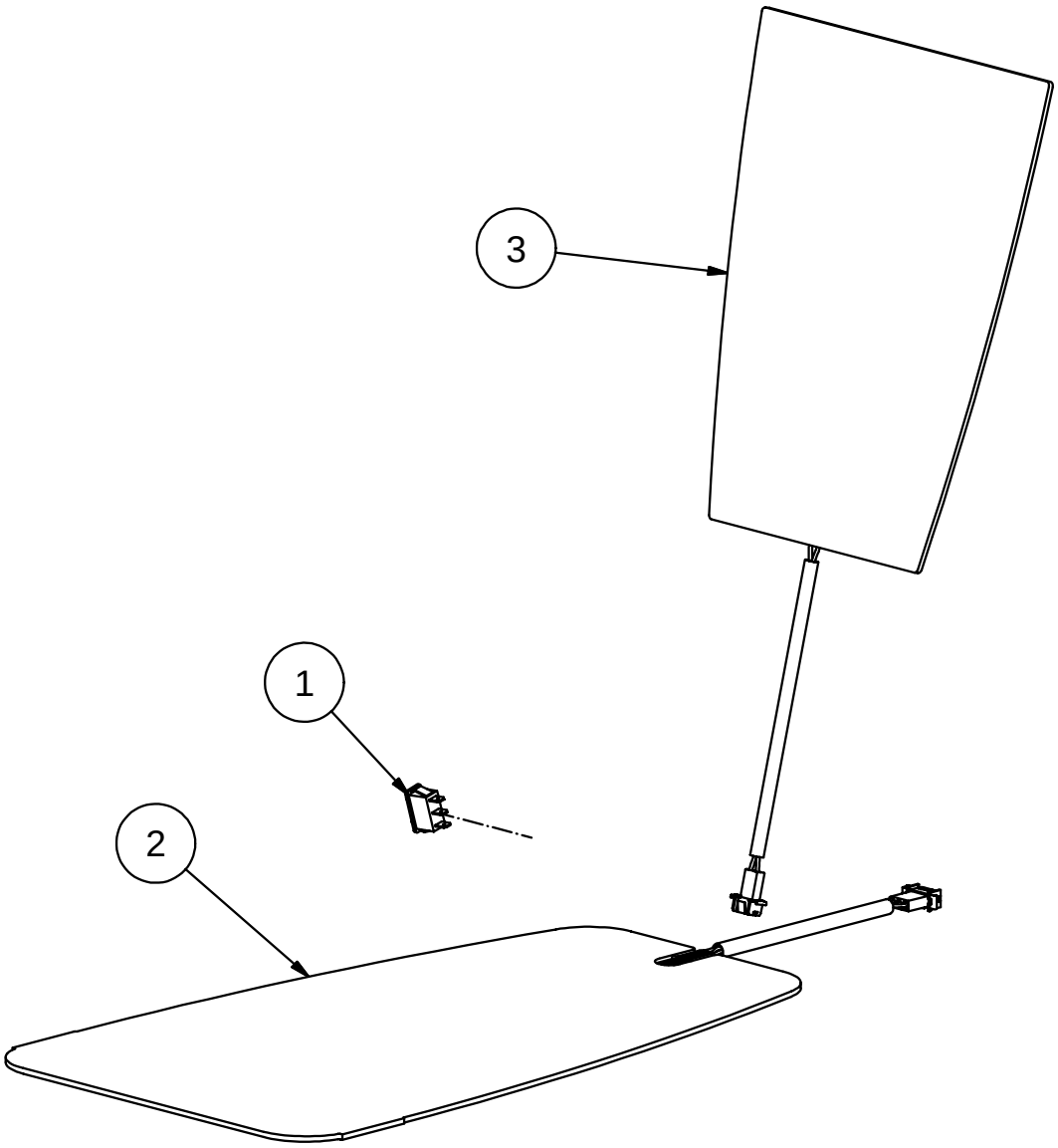

Fig.	Part. No.	Quantity	Description		
1	660590	2	SWITCH		
2	631158	1	SEAT HEATER		CUSHION
3	631159	1	SEAT HEATER		SQUAB

Be-Ge Industri AB • Box 912 • S-572 29 Oskarshamn • Sweden • Phone +46(0)491761800 • Fax +46(0)49181900

BE - GE Establ. 1934	Parts Replacements List **631384 Cover, seat heater** **Left/Right** **3000, 3100, 3400**	Doc. R1-631384 Date 071105 Rev.
	Valid from 070601 to	Rev.Date

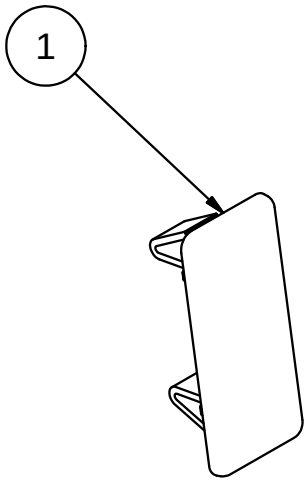

Fig.	Part. No.	Quantity	Description		
1	631225	1	COVER, SWITCH		HEATER

Be-Ge Industri AB • Box 912 • S-572 29 Oskarshamn • Sweden • Phone +46(0)491761800 • Fax +46(0)49181900

BE - GE Establ. 1934	Parts Replacements List **631418 Airvent kit** **Left/Right 24 Volt** **3000, 3100, 3400**	Doc. R1-631418 Date 071105 Rev. 2
	Valid from 070601 to	Rev.Date 100816

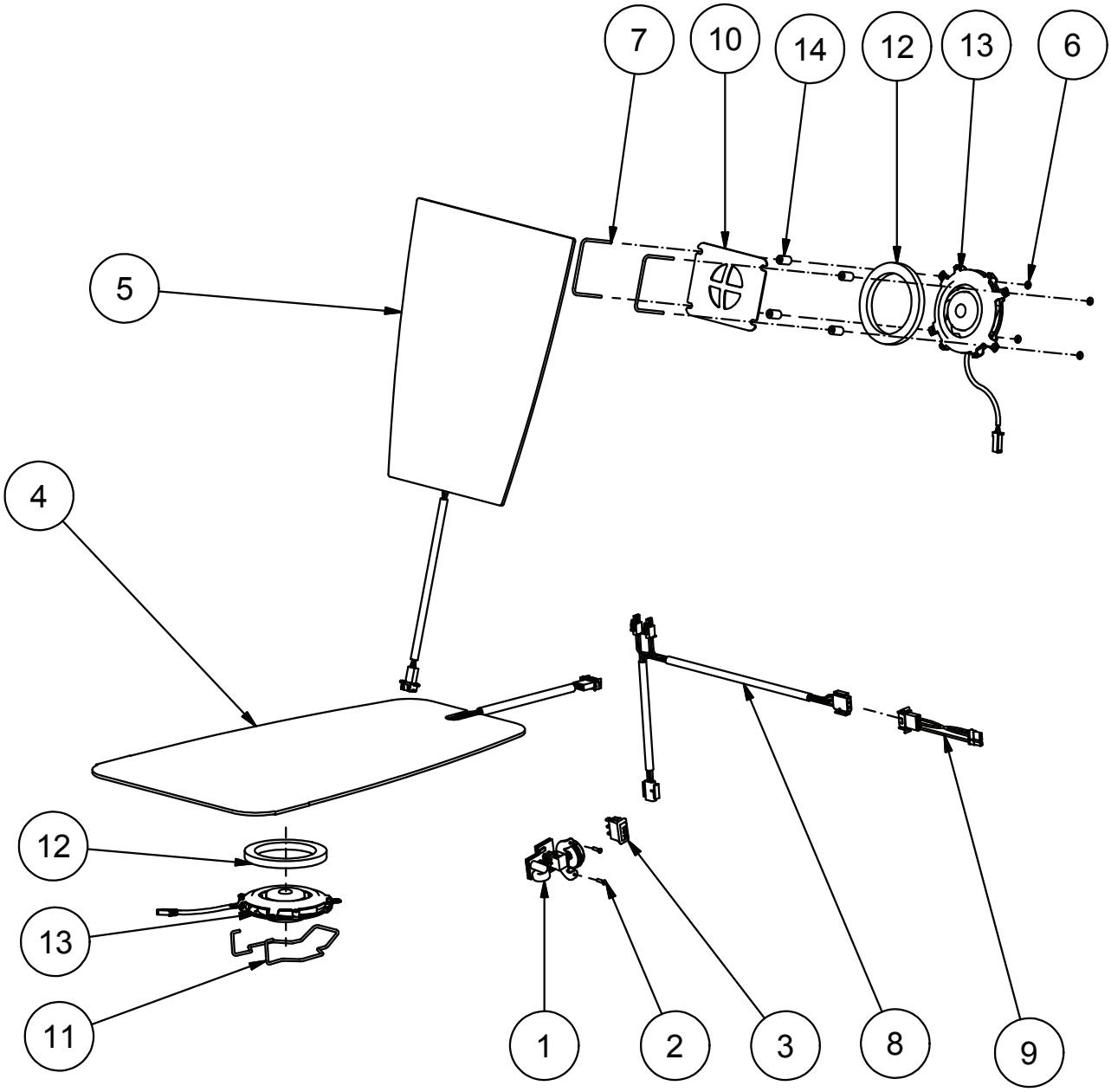

Fig.	Part. No.	Quantity	Description		
1	631541	1	FAN ADJUSTMENT ASM 24V		
2	501121	2	MFX M3x12 (SV.KR 4.8 POZ)		
3	660590	1	SWITCH		
4	631158	1	SEAT HEATER		CUSHION
5	631159	1	SEAT HEATER		SQUAB
6	652051	4	WASHER A-LOCK	3x9.5	UNTREATED
7	631087	2	YOKE		
8	631160	1	CABLE HARNESS AIRVENT		
9	631538	1	CABLE HARNESS AIRVENT		
10	631228	1	PROTECTIVE PLATE		
11	631086	1	YOKE		
12	620455	2	SEALING		100x75x9
13	631393	2	FAN 3000		24 V
14	631707	4	SPACER 5x10x16		

Be-Ge Industri AB • Box 912 • S-572 29 Oskarshamn • Sweden • Phone +46(0)491761800 • Fax +46(0)49181900

BE - GE Establ. 1934	Parts Replacements List **631422 Cover, airvent** **Left/Right** **3000, 3100, 3400**	Doc. R1-631422 Date 071105 Rev.
	Valid from 070601 to	Rev.Date

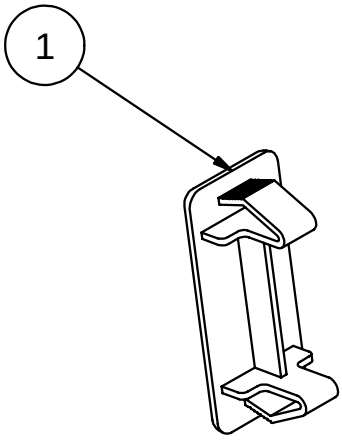

Fig.	Part. No.	Quantity	Description		
1	631224	2	COVER, AIRVENT CONTROL		

Be-Ge Industri AB • Box 912 • S-572 29 Oskarshamn • Sweden • Phone +46(0)491761800 • Fax +46(0)49181900

BE - GE Establ. 1934	Parts Replacements List **631453 Vibration Indicator** **3000, 3100, 3400**	Doc. R1-631453 Date 080220 Rev.
	Valid from 080220 to	Rev.Date

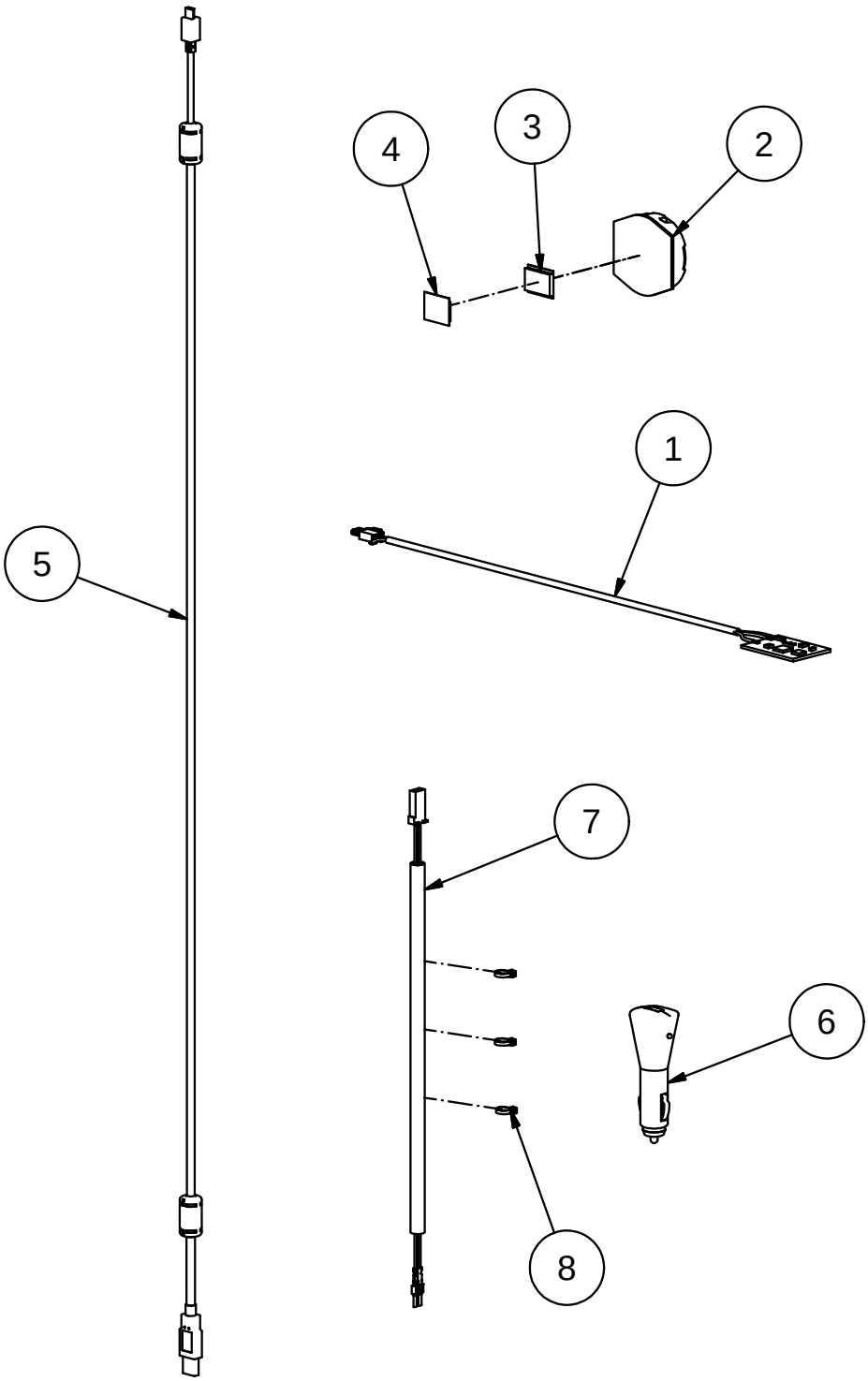

Fig.	Part. No.	Quantity	Description		
1	631446	1	VIBRATION SENSOR		
2	631447	1	VIBRATION INDICATOR		
3	631450	1	VELCRO TAPE - FEMALE		
4	631451	1	VELCRO TAPE-MALE		
5	631449	1	USB CABLE		
6	631448	1	USB TRUCK ADAPTER		
7	631427	1	CABLE HARNESS VIBRATION SENSOR		
8	660109	3	CABLE TIE		

Be-Ge Industri AB • Box 912 • S-572 29 Oskarshamn • Sweden • Phone +46(0)491761800 • Fax +46(0)49181900

BE - GE Establ. 1934	Parts Replacements List **631458 Control kit Flexi** **3000** **3000, 3100**	Doc. R1-631458 Date 080220 Rev. 2
	Valid from 080220 to	Rev.Date 110616

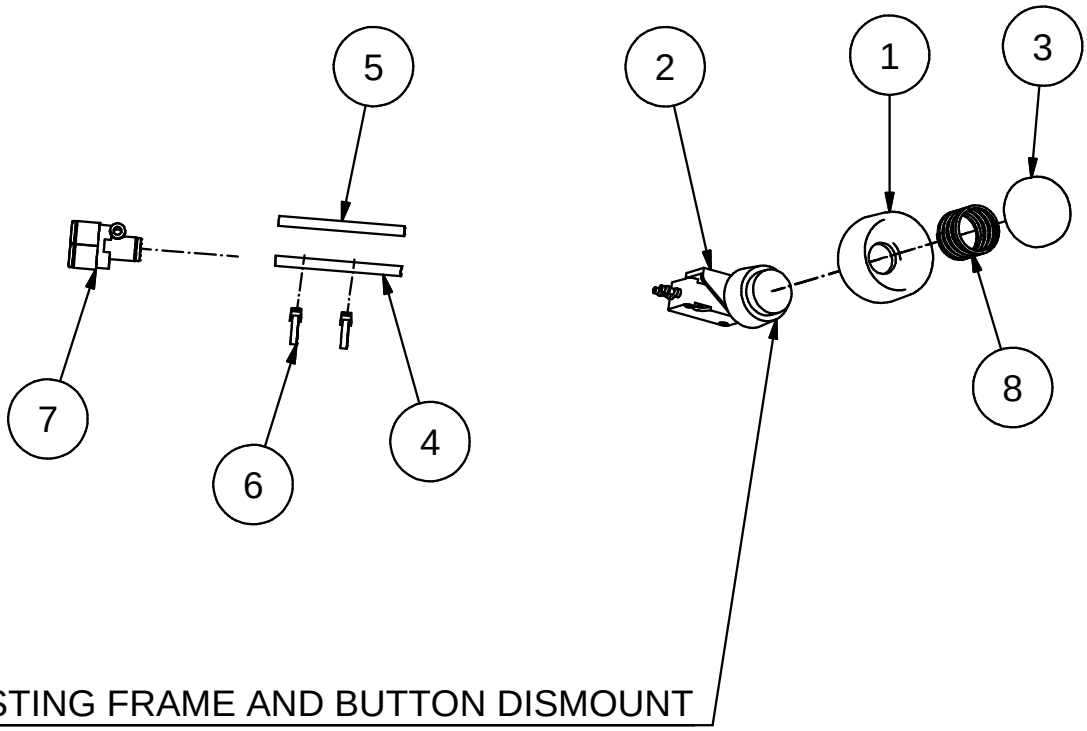

Fig.	Part. No.	Quantity	Description		
1	631438	1	FRAME		
2	660637	1	3/2 VALVE		
3	631437	1	BUTTON		
4	660609	0.4 LPM	TUBE 4x2,5 RED		
5	660683	0.6 LPM	TUBE 4x2,5 TRANSPARENT		
6	660109	2	CABLE TIE		
7	660603	1	Y-CONNECTION		
8	631719	1	SPRING 1.2x17x20		

Be-Ge Industri AB • Box 912 • S-572 29 Oskarshamn • Sweden • Phone +46(0)491761800 • Fax +46(0)49181900

BE - GE Establ. 1934	Parts Replacements List **631594 Seat switch kit** **3000** **3000, 3100, 3400**	Doc. R1-631594 Date 090101 Rev. 2
	Valid from 090101 to	Rev.Date 110922

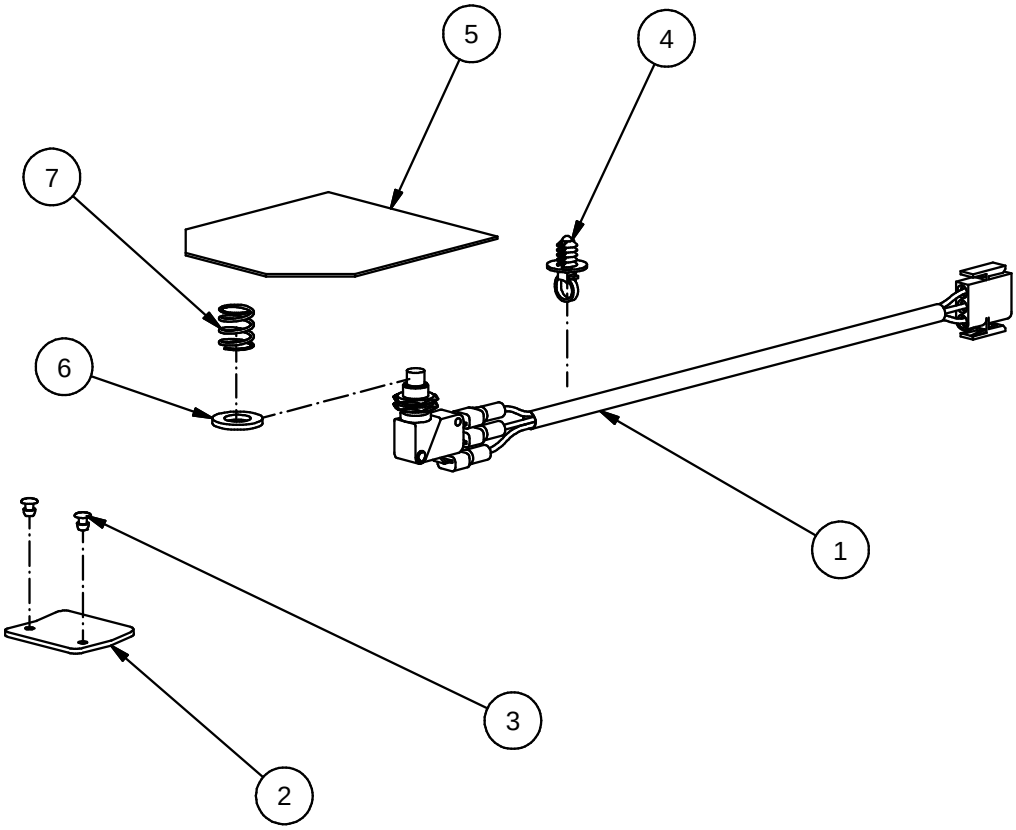

Fig.	Part. No.	Quantity	Description		
1	631460	1	MICROSWITCH IP40		
2	631499	1	LIMITER, SEAT ADJ		
3	653004	2	RIVET AL/ST	3.2x6	AP/D BS
4	660673	1	CLIP, CABLE TIE		
5	631459	1	SWITCH PLATE, SEAT FOAM		
6	561027	1	WASHER	10.5x20x2	
7	631750	1	SPRING 1.2x11.5x15		

Be-Ge Industri AB • Box 912 • S-572 29 Oskarshamn • Sweden • Phone +46(0)491761800 • Fax +46(0)49181900