BE - GE Establ. 1934	Parts Replacements List **3100L** **Medium, controls left**	Doc. R2-3100L Date 091201 Rev.
	Valid from 090101 to	Rev.Date

Be-Ge Industri AB • Box 912 • S-572 29 Oskarshamn • Sweden • Phone +46(0)491761800 • Fax +46(0)49181900

BE-GE Establ. 1934	Parts Replacements List **631303 Slide kit** **Mechanical release** **3100, 3400**	Doc. R1-631303 Date 071105 Rev. 1
	Valid from 070601 to	Rev.Date 090101

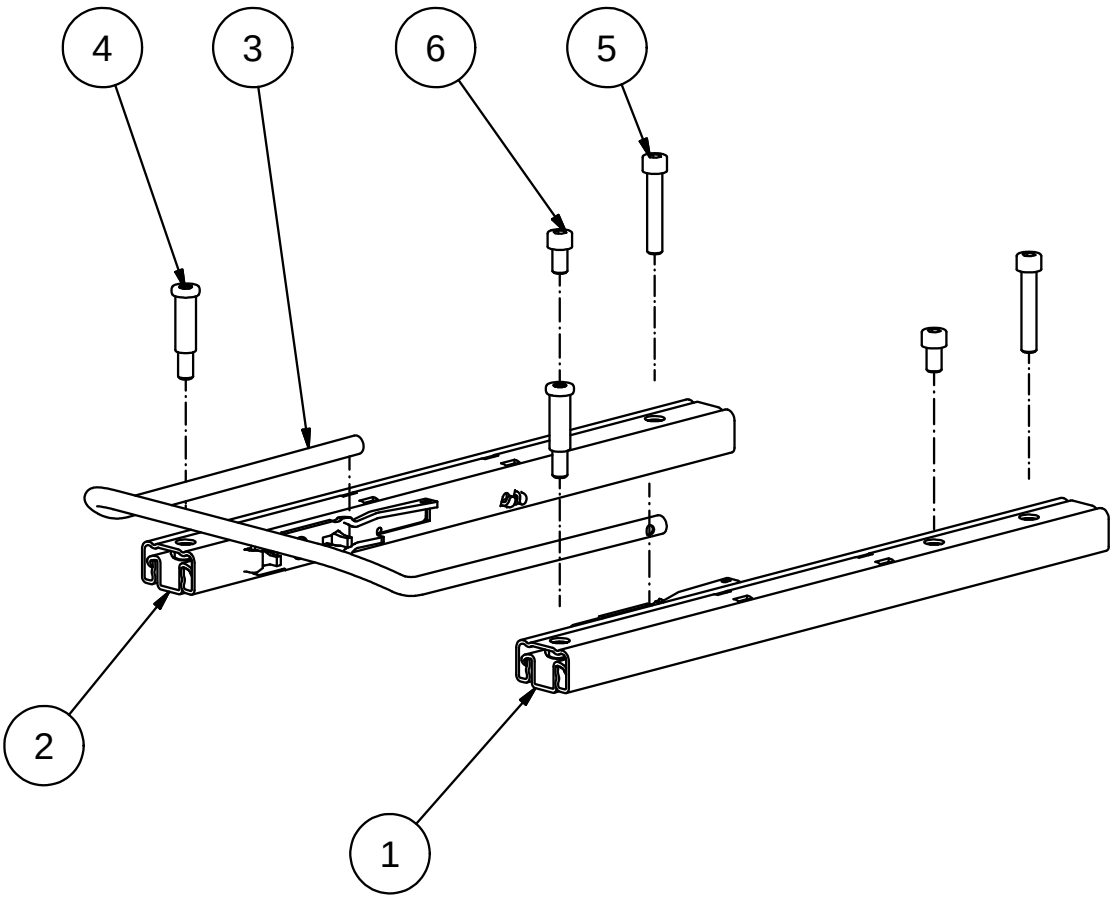

Fig.	Part. No.	Quantity	Description		
1	631072	1	SLIDE LEFT		
2	631073	1	SLIDE RIGHT		
3	631227	1	HANDLE SLIDE RAILS		
4	631101	2	SPACER BOLT		
5	423021	2	SCREW MC6S	M8x45	DIN912 ZN-BL. 8.8
6	650100	2	SCREW MC6S	M8x14	ZN BLACK

Be-Ge Industri AB • Box 912 • S-572 29 Oskarshamn • Sweden • Phone +46(0)491761800 • Fax +46(0)49181900

BE-GE Establ. 1934	Parts Replacements List **631635 Slide kit** **C&F** **3100, 3400**	Doc. R1-631635 Date 090101 Rev. 1
	Valid from 090101 to	Rev.Date 091016

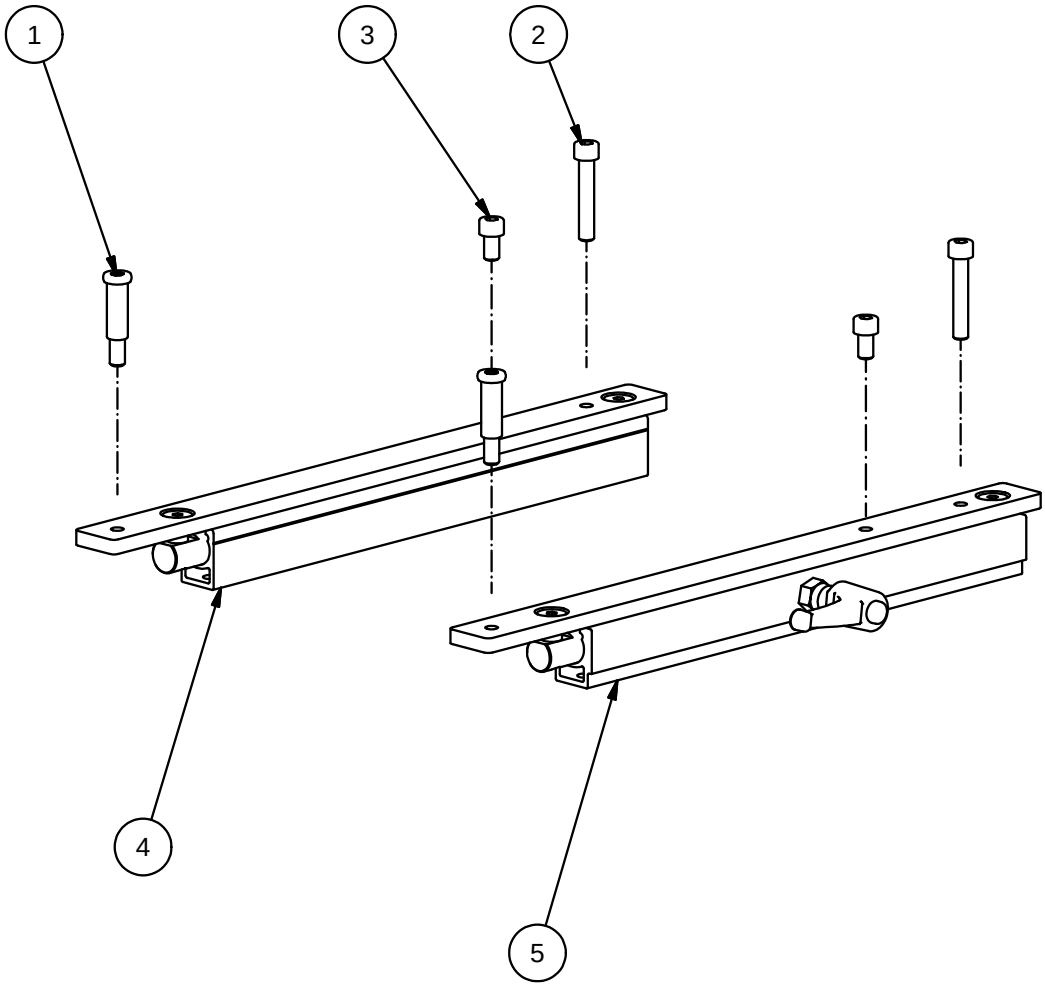

Fig.	Part. No.	Quantity	Description		
1	631101	2	SPACER BOLT		
2	423021	2	SCREW MC6S	M8x45	DIN912 ZN-BL. 8.8
3	650100	2	SCREW MC6S	M8x14	ZN BLACK
4	660676	1	SLIDE RAIL	C&F	
5	660677	1	SLIDE RAIL	C&F	LOCKABLE SIDE

Be-Ge Industri AB • Box 912 • S-572 29 Oskarshamn • Sweden • Phone +46(0)491761800 • Fax +46(0)49181900

BE - GE
Establ. 1934

Parts Replacements List

631580 Seat base kit

Seat base

3100

Valid from 090101 to

Doc. R1-631580

Date 090101

Rev.

Rev.Date

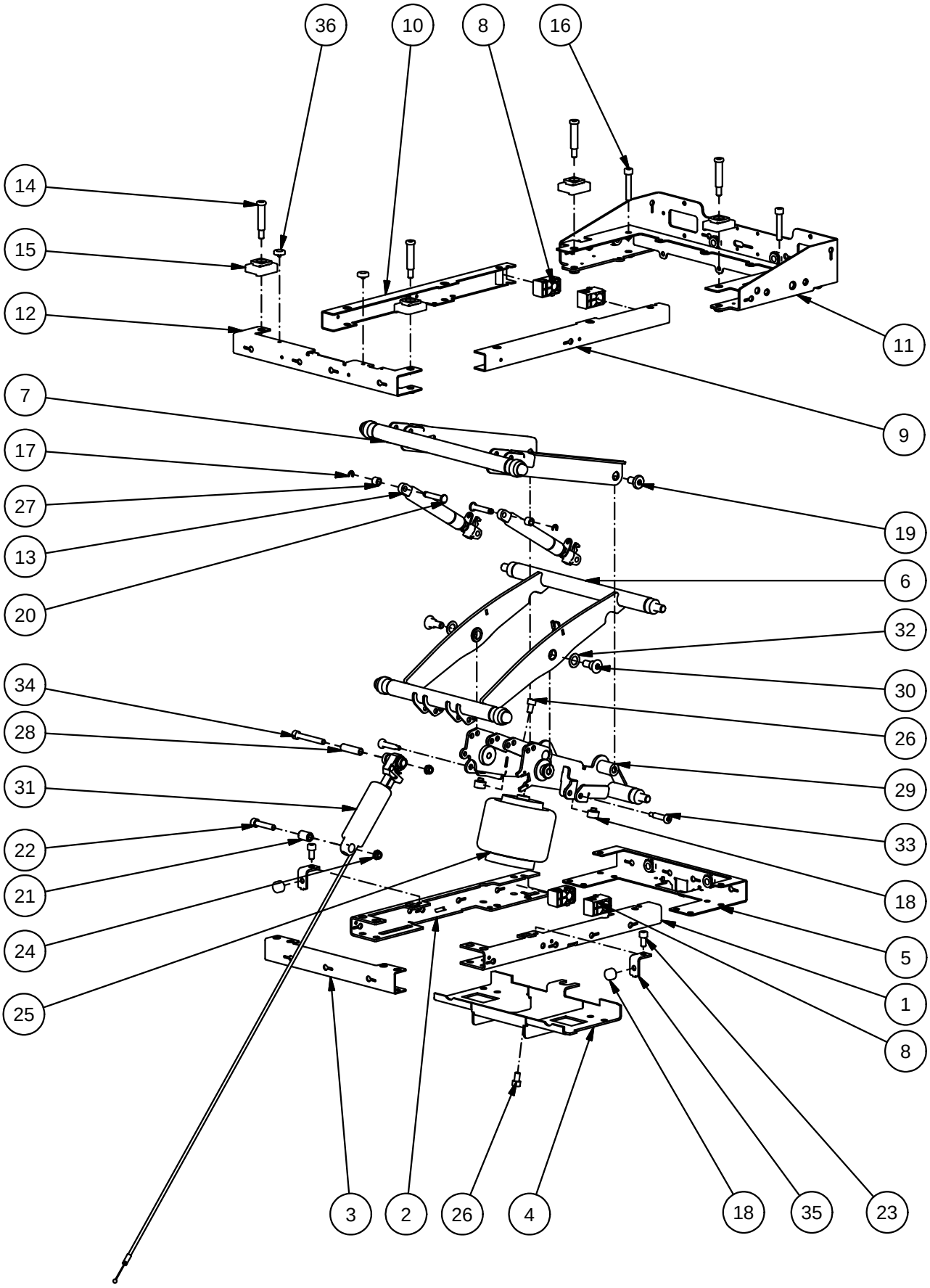

BE - GE
Establ. 1934

Parts Replacements List

631580 Seat base kit

Seat base

3100

Doc. R1-631580

Date 090101

Rev.

Valid from 090101 to

Rev.Date

Fig.	Part. No.	Quantity	Description		
1	631000	1	LOWER RAIL LEFT		
2	631001	1	LOWER RAIL RIGHT		
3	631002	1	LOWER FRONT CROSS PLATE		
4	631012	1	LOWER BRIDGE		
5	631114	1	LOWER REAR CROSS PLATE		
6	631514	1	MIDDLE SCISSORS ASM		
7	631515	1	OUTER SCISSORS ASM		
8	631051	4	BLOCK		
9	631004	1	UPPER RAIL LEFT		
10	631005	1	UPPER RAIL RIGHT		
11	631016	1	WELDED BRACKET BACKREST		
12	631115	1	UPPER FRONT CROSS PLATE		
13	631557	2	GAS SPRING SRH		
14	631100	4	SPACER BOLT		
15	631049	4	SLIDE BLOCK		
16	423021	2	SCREW MC6S	M8x45	DIN912 ZN-BL. 8.8
17	462009	2	RETAINING RING	RS7	DIN6799 ZN
18	501409	4	RUBBER STOP		
19	631299	2	BEARING BOLT		
20	631196	2	PIN		
21	622149	1	BUSHING		
22	650066	1	SCREW MC6S	M8x40	ISO4762 ZN 8.8
23	650102	2	SCREW MC6S GF	M8x16	ZN BLACK
24	210401	2	LOCKING NUT	M8	DIN6925 ZN K8
25	631251	1	AIR SPRING		SZ 51-10 P02
26	650100	2	SCREW MC6S	M8x14	ZN BLACK
27	660636	2	SPACER	8.2x12x10	
28	631498	1	SPACING SLEEVE		
29	631485	1	INNER SCISSORS		
30	631495	2	BEARING BOLT M10		
31	631517	1	SHOCK ABSORB. STD		
32	500392	2	PLASTIC WASHER		
33	631494	2	BEARING BOLT M6		
34	650166	1	Screw MC6S	M8x60	DIN912 ZN 8.8
35	631552	2	HEIGHT LIMITER		
36	631519	2	SLIDE KNOB		

BE-GE Establ. 1934	Parts Replacements List **631571 Control kit** **Controls left** **3100**	Doc. R1-631571 Date 090101 Rev.
	Valid from 090101 to	Rev.Date

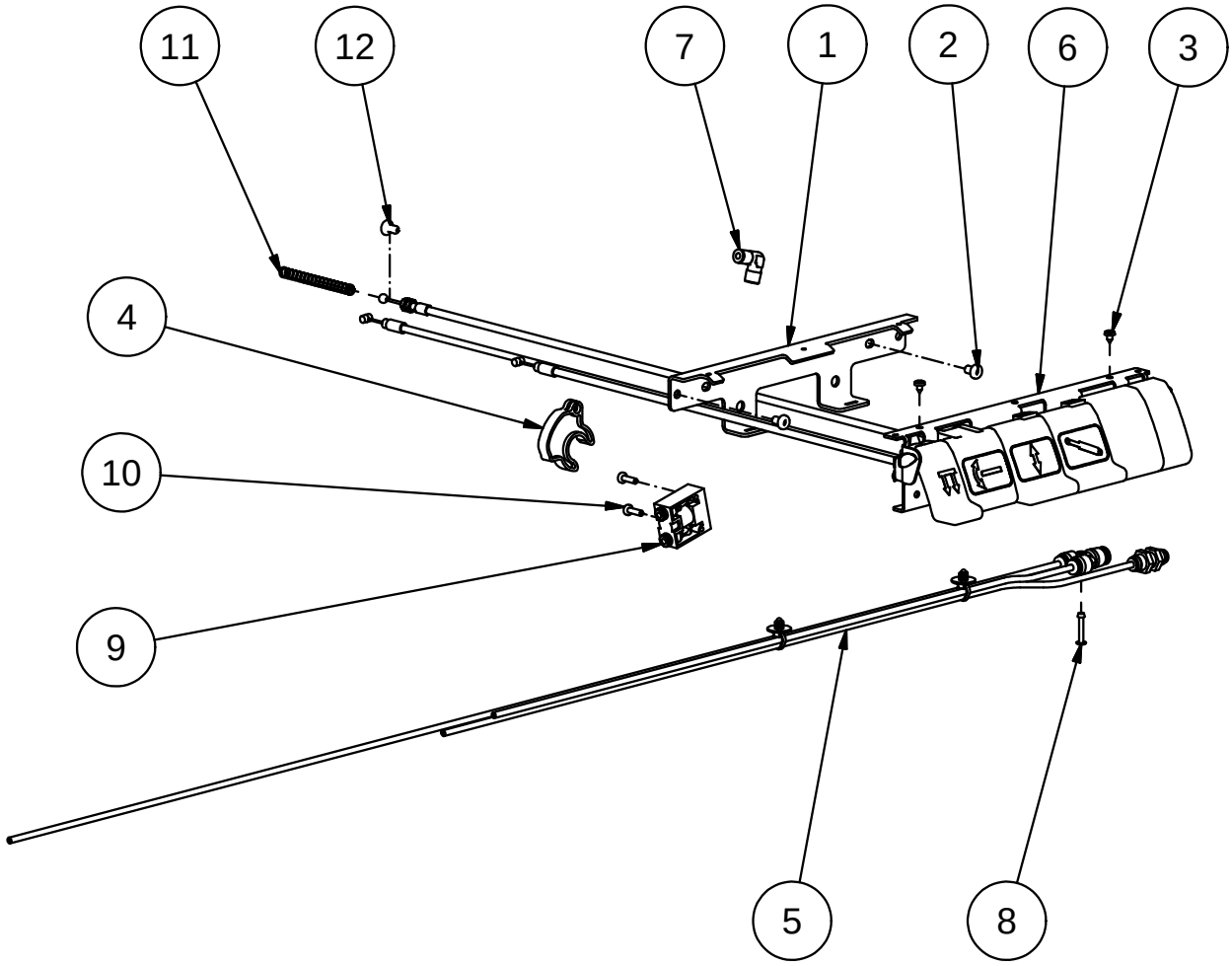

Fig.	Part. No.	Quantity	Description		
1	631039	1	BRACKET		
2	650088	2	SCREW MRT-TT	M5x8	ISO7045 ZN
3	650152	2	SCREW RTS	ST3.5x6.5	DIN7981C ZN
4	631477	1	CAM CONTROL		
5	631500	1	TUBE ASM, STANDARD		
6	631276	1	CONTROL SET		
7	660397	1	ONE TOUCH FITTING ELBOW	4-1/8	
8	653015	1	RIVET AL/ST	3.0x20	
9	628539	1	VALVE 3/2		
10	650095	2	SCREW WN 156-3	M4x12	ZN
11	660624	1	Compress spring		
12	631454	1	SPRING RETAINER		

Be-Ge Industri AB • Box 912 • S-572 29 Oskarshamn • Sweden • Phone +46(0)491761800 • Fax +46(0)49181900

BE - GE
Establ. 1934

Parts Replacements List

631573 Control kit

Controls left DPS

3100

Valid from 090101 to

Doc. R1-631573

Date 090101

Rev.

Rev.Date

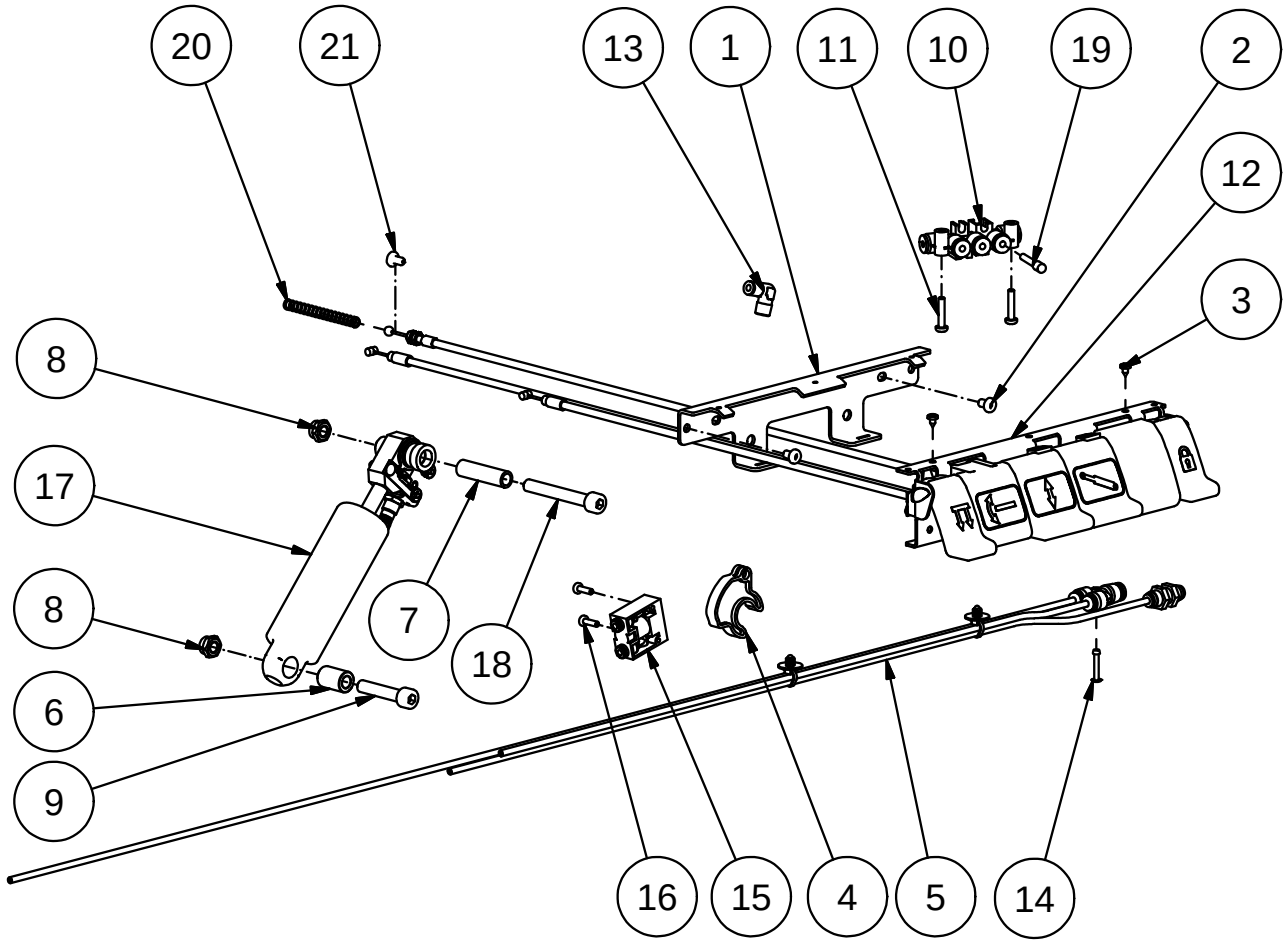

Fig.	Part. No.	Quantity	Description		
1	631039	1	BRACKET		
2	650088	2	SCREW MRT-TT	M5x8	ISO7045 ZN
3	650152	2	SCREW RTS	ST3.5x6.5	DIN7981C ZN
4	631477	1	CAM CONTROL		
5	631500	1	TUBE ASM, STANDARD		
6	622149	1	BUSHING		
7	631498	1	SPACING SLEEVE		
8	210401	2	LOCKING NUT	M8	DIN6925 ZN K8
9	650066	1	SCREW MC6S	M8x40	ISO4762 ZN 8.8
10	660592	1	ONE-TOUCH FITTING	KM16	MANIFOLD
11	650156	2	SCREW MRT-TT	M4x20	ZN
12	631279	1	CONTROL SET		
13	660397	1	ONE TOUCH FITTING ELBOW	4-1/8	
14	653015	1	RIVET AL/ST	3.0x20	
15	628539	1	VALVE 3/2		
16	650095	2	SCREW WN 156-3	M4x12	ZN
17	631518	1	SHOCK ABSORBER DPS		
18	650166	1	Screw MC6S	M8x60	DIN912 ZN 8.8
19	660640	1	PLUG	4 mm	ONE TOUCH FITTING
20	660624	1	Compress spring		
21	631454	1	SPRING RETAINER		

Be-Ge Industri AB • Box 912 • S-572 29 Oskarshamn • Sweden • Phone +46(0)491761800 • Fax +46(0)49181900

BE-GE Establ. 1934	Parts Replacements List **631575 Control kit** **Controls left +/-** **3100**	Doc. R1-631575 Date 090101 Rev.
	Valid from 090101 to	Rev.Date

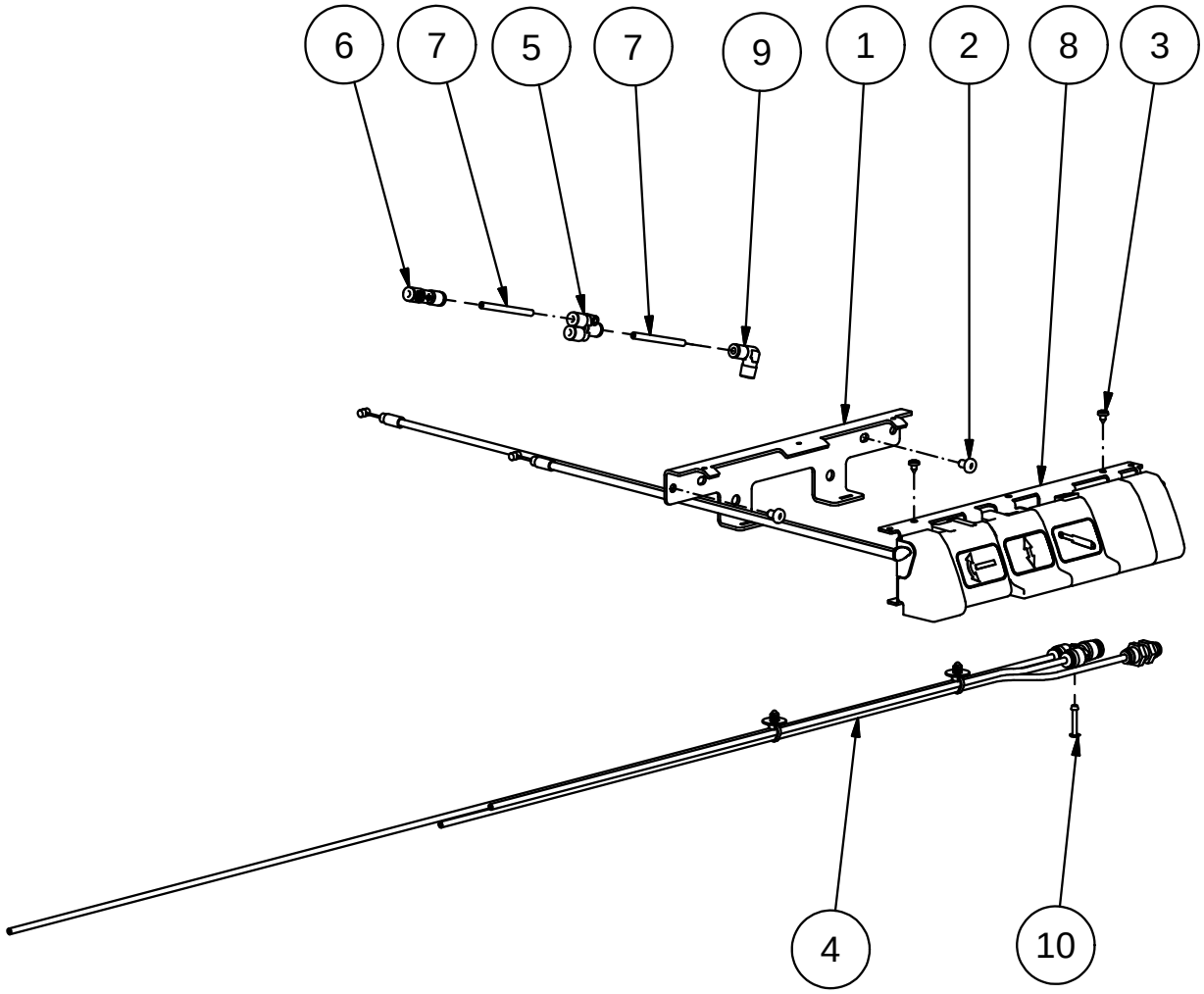

Fig.	Part. No.	Quantity	Description		
1	631039	1	BRACKET		
2	650088	2	SCREW MRT-TT	M5x8	ISO7045 ZN
3	650152	2	SCREW RTS	ST3.5x6.5	DIN7981C ZN
4	631500	1	TUBE ASM, STANDARD		
5	660603	1	Y-CONNECTION		
6	660614	1	NON RETURN VALVE		
7	660605	2	TUBE 4x2,5 GREEN		
8	631282	1	CONTROL SET		
9	660397	1	ONE TOUCH FITTING ELBOW	4-1/8	
10	653015	1	RIVET AL/ST	3.0x20	

Be-Ge Industri AB • Box 912 • S-572 29 Oskarshamn • Sweden • Phone +46(0)491761800 • Fax +46(0)49181900

BE - GE
Establ. 1934

Parts Replacements List

631577 Control kit

Controls left +/- DPS

3100

Valid from 090101 to

Doc. R1-631577

Date 090101

Rev.

Rev.Date

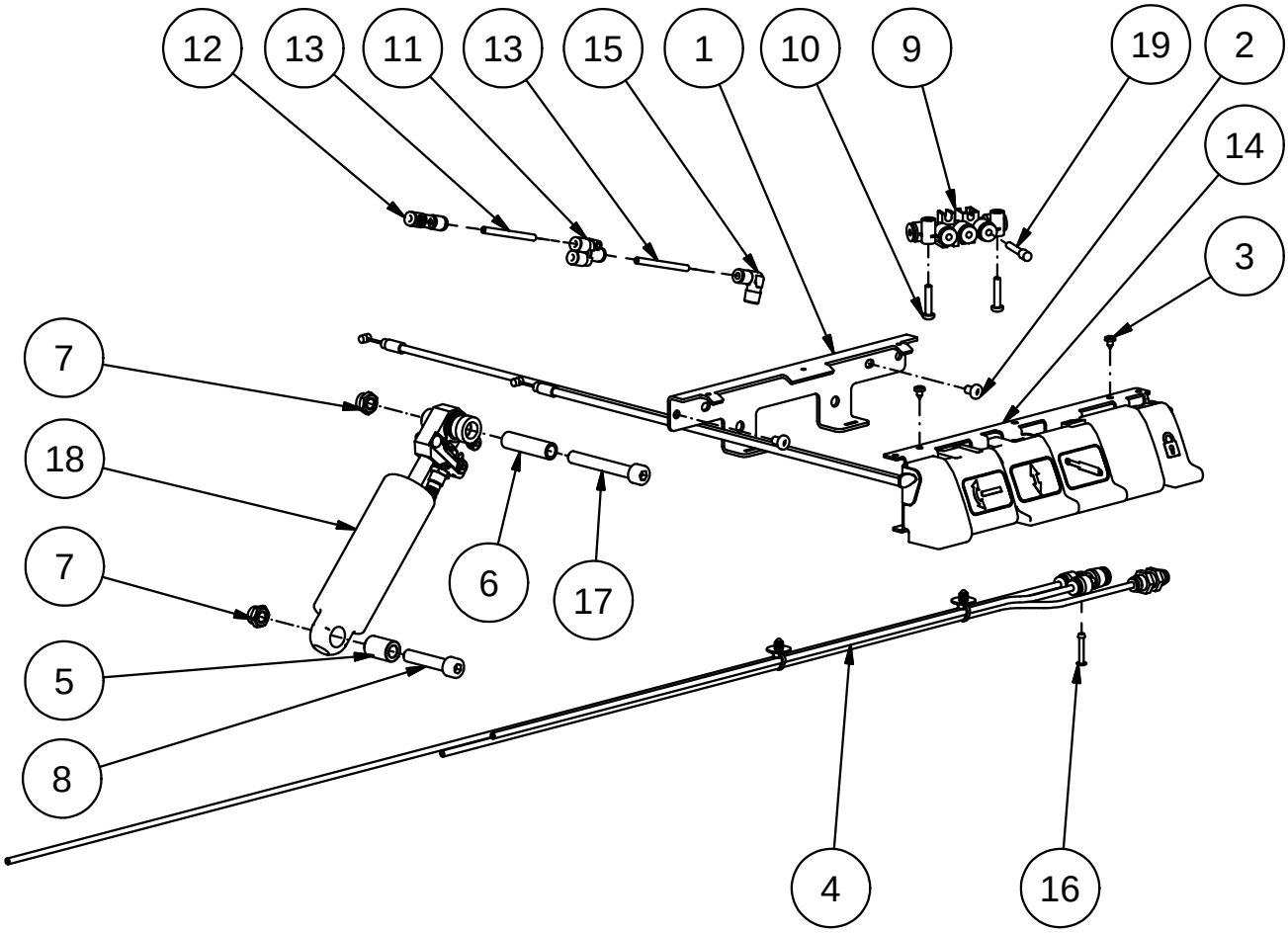

Fig.	Part. No.	Quantity	Description		
1	631039	1	BRACKET		
2	650088	2	SCREW MRT-TT	M5x8	ISO7045 ZN
3	650152	2	SCREW RTS	ST3.5x6.5	DIN7981C ZN
4	631500	1	TUBE ASM, STANDARD		
5	622149	1	BUSHING		
6	631498	1	SPACING SLEEVE		
7	210401	2	LOCKING NUT	M8	DIN6925 ZN K8
8	650066	1	SCREW MC6S	M8x40	ISO4762 ZN 8.8
9	660592	1	ONE-TOUCH FITTING	KM16	MANIFOLD
10	650156	2	SCREW MRT-TT	M4x20	ZN
11	660603	1	Y-CONNECTION		
12	660614	1	NON RETURN VALVE		
13	660605	2	TUBE 4x2,5 GREEN		
14	631285	1	CONTROL SET		
15	660397	1	ONE TOUCH FITTING ELBOW	4-1/8	
16	653015	1	RIVET AL/ST	3.0x20	
17	650166	1	Screw MC6S	M8x60	DIN912 ZN 8.8
18	631518	1	SHOCK ABSORBER DPS		
19	660640	1	PLUG	4 mm	ONE TOUCH FITTING

Be-Ge Industri AB • Box 912 • S-572 29 Oskarshamn • Sweden • Phone +46(0)491761800 • Fax +46(0)49181900

BE - GE
Establ. 1934

Parts Replacements List

631585 Control kit

Controls left +/- C4

3100

Valid from 090101 to

Doc.	R1-631585
Date	090101
Rev.	
Rev.Date	

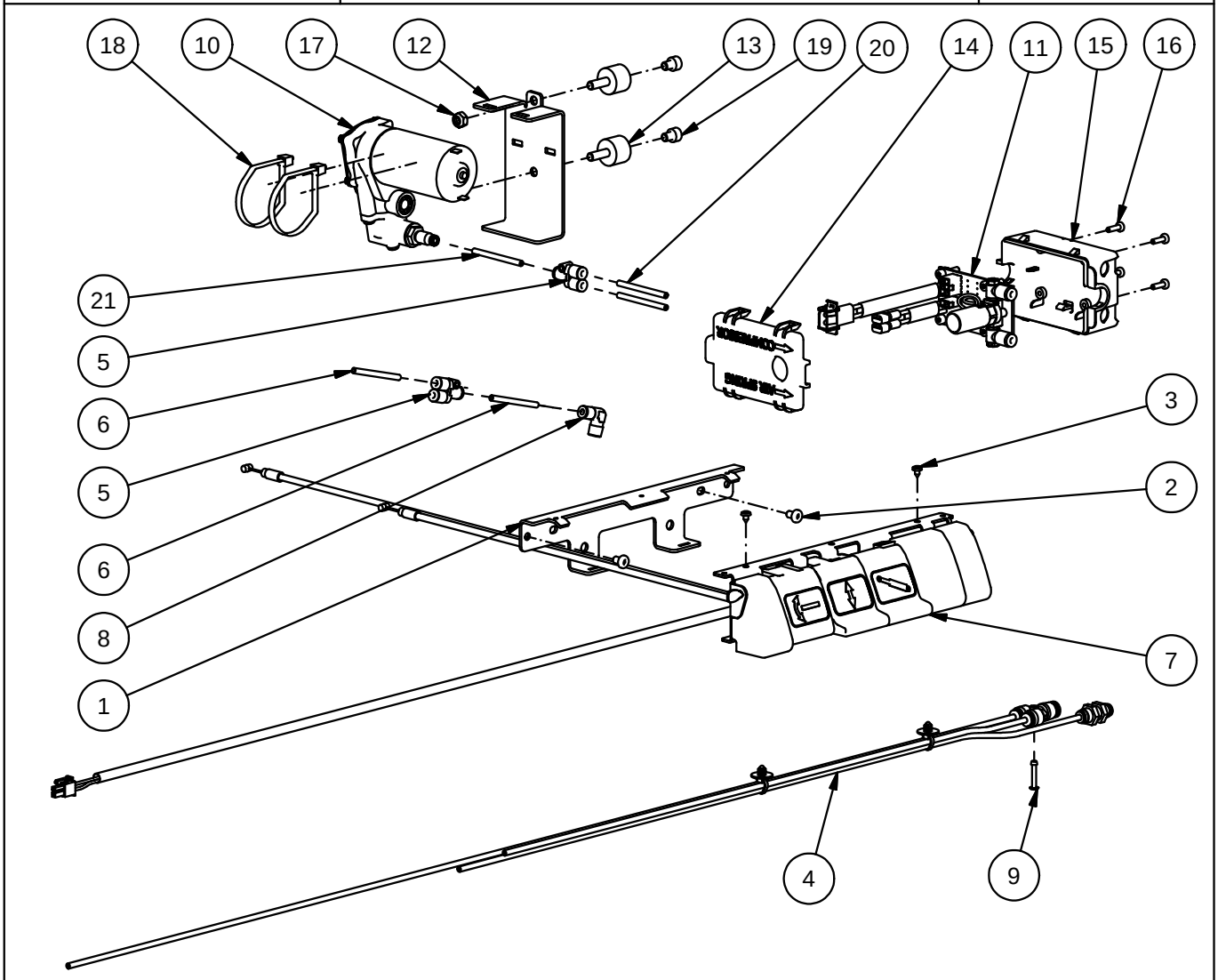

Fig.	Part. No.	Quantity	Description		
1	631039	1	BRACKET		
2	650088	2	SCREW MRT-TT	M5x8	ISO7045 ZN
3	650152	2	SCREW RTS	ST3.5x6.5	DIN7981C ZN
4	631500	1	TUBE ASM, STANDARD		
5	660603	2	Y-CONNECTION		
6	660605	2	TUBE 4x2,5 GREEN		(70 mm) (420 mm)
7	631582	1	CONTROL SET		
8	660397	1	ONE TOUCH FITTING ELBOW	4-1/8	
9	653015	1	RIVET AL/ST	3.0x20	
10	622864	1	COMPRESSOR THOMAS 24V		
11	631520	1	CONTROL UNIT		
12	631521	1	BRACKET COMPRESSOR		
13	660658	2	CYLINDRICAL VIB. DAMPER		
14	631511	1	COVER, BOX ELECTRONICS		
15	631510	1	BOX ELECTRONICS		
16	650095	4	SCREW WN 156-3	M4x12	ZN
17	651009	2	LOCK NUT	M6	(DIN 6924) FZB
18	500317	2	STRIPE		
19	650167	2	SCREW MC6S	M6x8	ISO 4762 FZB
20	660609	2	TUBE 4x2,5 RED		(240 mm) (Lumbar 340 mm)
21	660388	1	TUBE 4x2,5 BLACK	DIN 73378	(110 mm)

Be-Ge Industri AB • Box 912 • S-572 29 Oskarshamn • Sweden • Phone +46(0)491761800 • Fax +46(0)49181900

BE - GE
Establ. 1934

Parts Replacements List

631332 Cover kit

Controls left, no buckle

3000, 3100, 3400

Valid from 070601 to

Doc. R1-631332

Date 071105

Rev.

Rev.Date

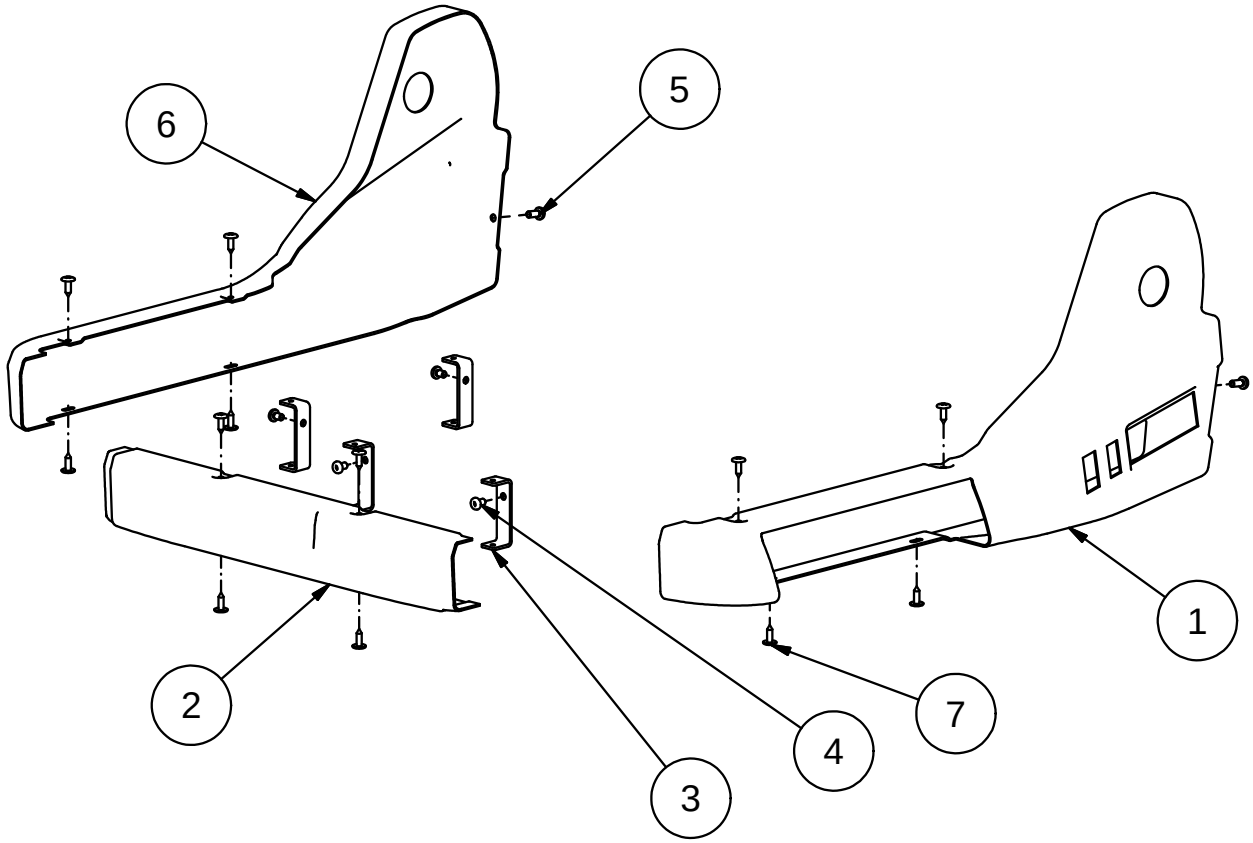

Fig.	Part. No.	Quantity	Description		
1	631096	1	SIDE COVER LEFT		NO BUCKLE
2	631102	1	FRONT COVER		
3	631062	4	BRACKET, COVER		
4	650088	4	SCREW MRT-TT	M5x8	ISO7045 ZN
5	650126	2	SCREW MRT-TT	M5x12	ISO7045 ZN BLACK
6	631099	1	SIDE COVER		
7	650118	12	SCREW MONTAGE	4.2x14	BLACK PAINTED

Be-Ge Industri AB • Box 912 • S-572 29 Oskarshamn • Sweden • Phone +46(0)491761800 • Fax +46(0)49181900

BE - GE
Establ. 1934

Parts Replacements List

631624 Slim cover kit RIGHT

Controls left, buckle right/no buckle

3000, 3100, 3400

Valid from 090101 to

Doc. R1-631624

Date 090101

Rev.

Rev.Date

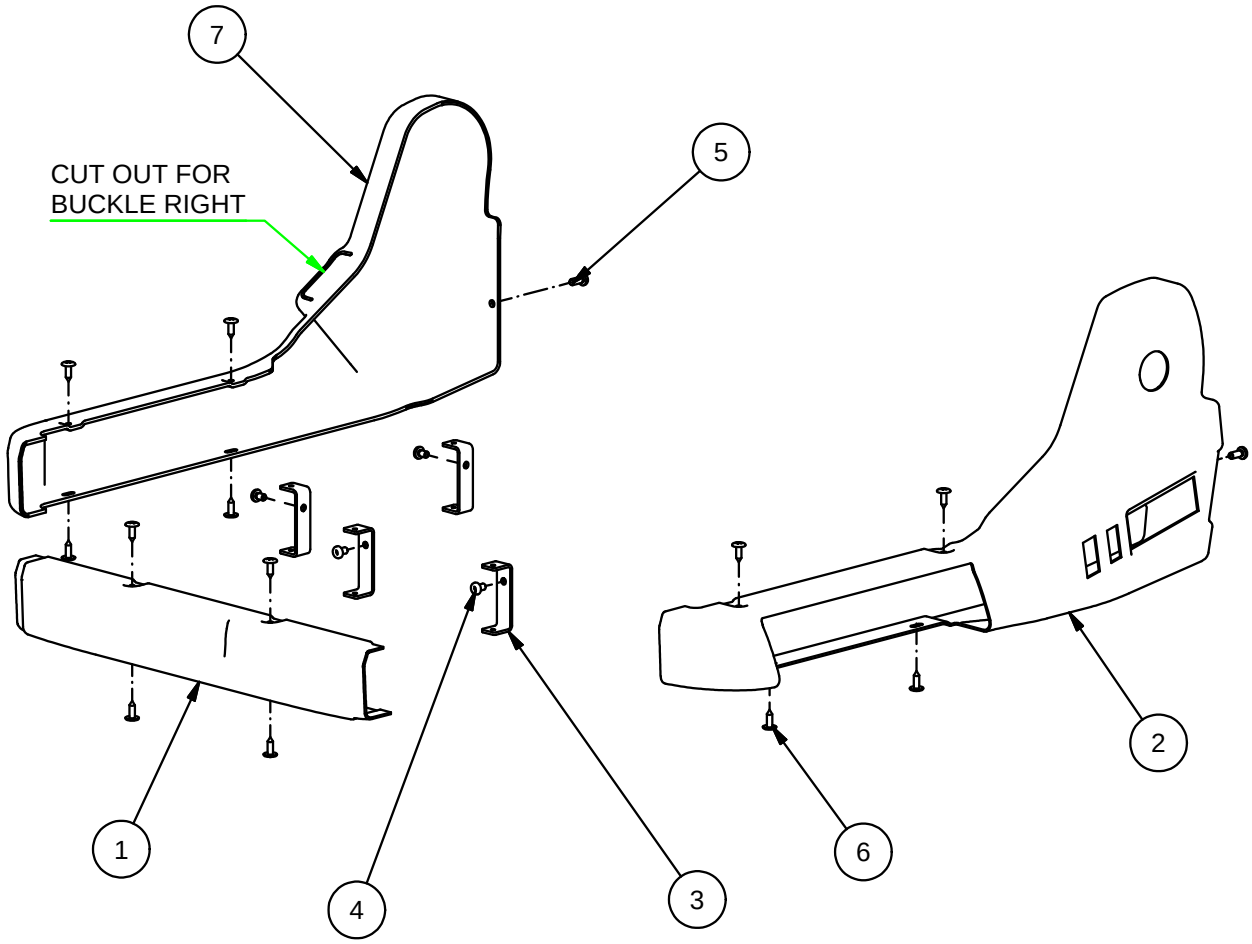

Fig.	Part. No.	Quantity	Description		
1	631102	1	FRONT COVER		
2	631096	1	SIDE COVER LEFT		NO BUCKLE
3	631062	4	BRACKET, COVER		
4	650088	4	SCREW MRT-TT	M5x8	ISO7045 ZN
5	650126	2	SCREW MRT-TT	M5x12	ISO7045 ZN BLACK
6	650118	12	SCREW MONTAGE	4.2x14	BLACK PAINTED
7	631502	1	SIDE COVER SLIM, RIGHT		

Be-Ge Industri AB • Box 912 • S-572 29 Oskarshamn • Sweden • Phone +46(0)491761800 • Fax +46(0)49181900

BE-GE Establ. 1934	Parts Replacements List **631145 Protection bellow** **3000, 3100, 3400**	Doc. R1-631145 Date 071105 Rev.
	Valid from 070601 to	Rev.Date

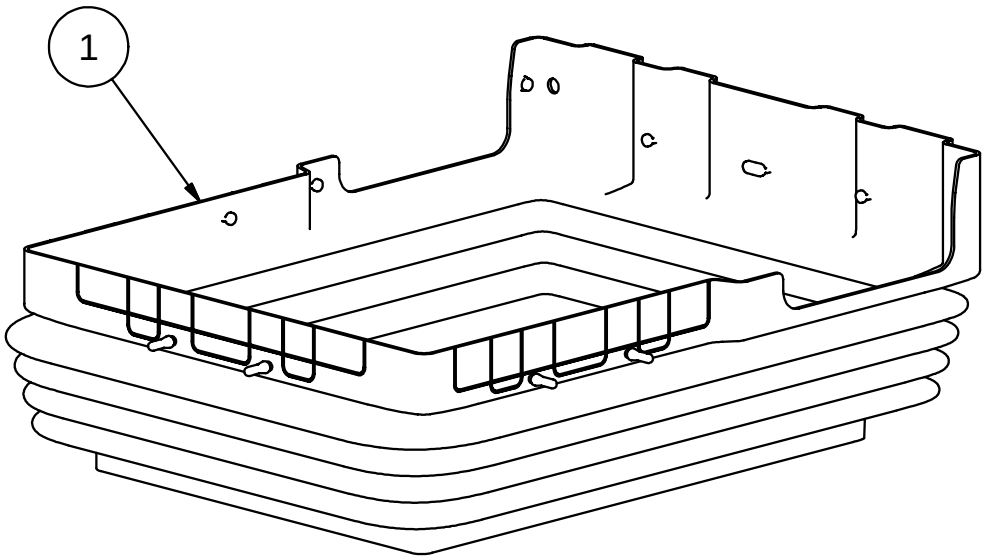

Fig.	Part. No.	Quantity	Description		
1	631145	1	PROTECTION BELLOW		

Be-Ge Industri AB • Box 912 • S-572 29 Oskarshamn • Sweden • Phone +46(0)491761800 • Fax +46(0)49181900

BE - GE
Establ. 1934

Parts Replacements List

631305 Seat plate kit

3000, 3100, 3400

Valid from 070601 to

Doc. R1-631305

Date 071105

Rev.

Rev.Date

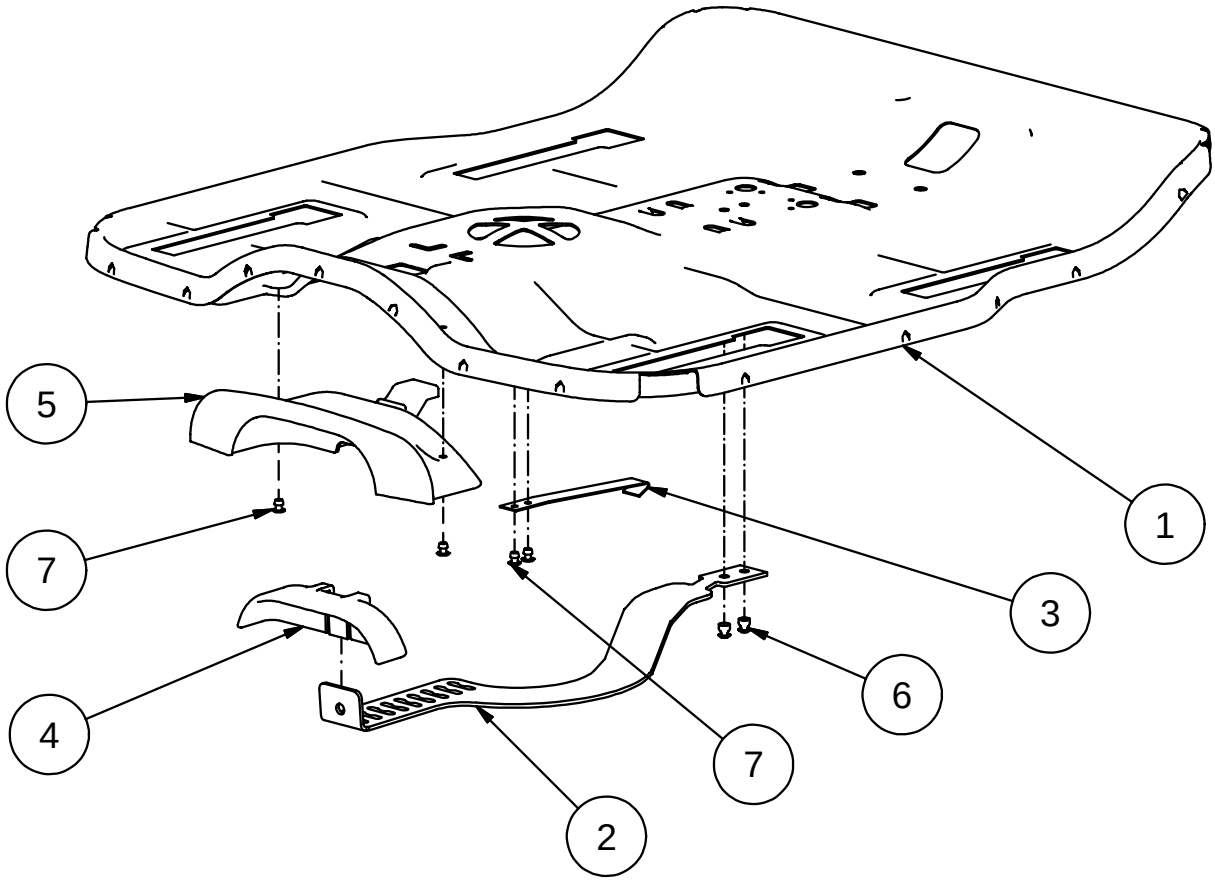

Fig.	Part. No.	Quantity	Description		
1	631009	1	SEAT PLATE		
2	631041	1	INDEXING BRACKET		
3	631059	1	SPRING,STOP CUSHION ADJ		
4	631026	1	CONTROL HANDLE		
5	631027	1	COVER		
6	416022	2	RIVET AL/ST	Ø4.8x7.4	
7	653004	4	RIVET AL/ST	3.2x6	AP/D BS

Be-Ge Industri AB • Box 912 • S-572 29 Oskarshamn • Sweden • Phone +46(0)491761800 • Fax +46(0)49181900

BE - GE
Establ. 1934

Parts Replacements List

631309 Backrest kit

High backrest, 3-point safety belt
3000, 3100, 3400

Valid from 070601 to

Doc. R1-631309
Date 071105
Rev.
Rev.Date

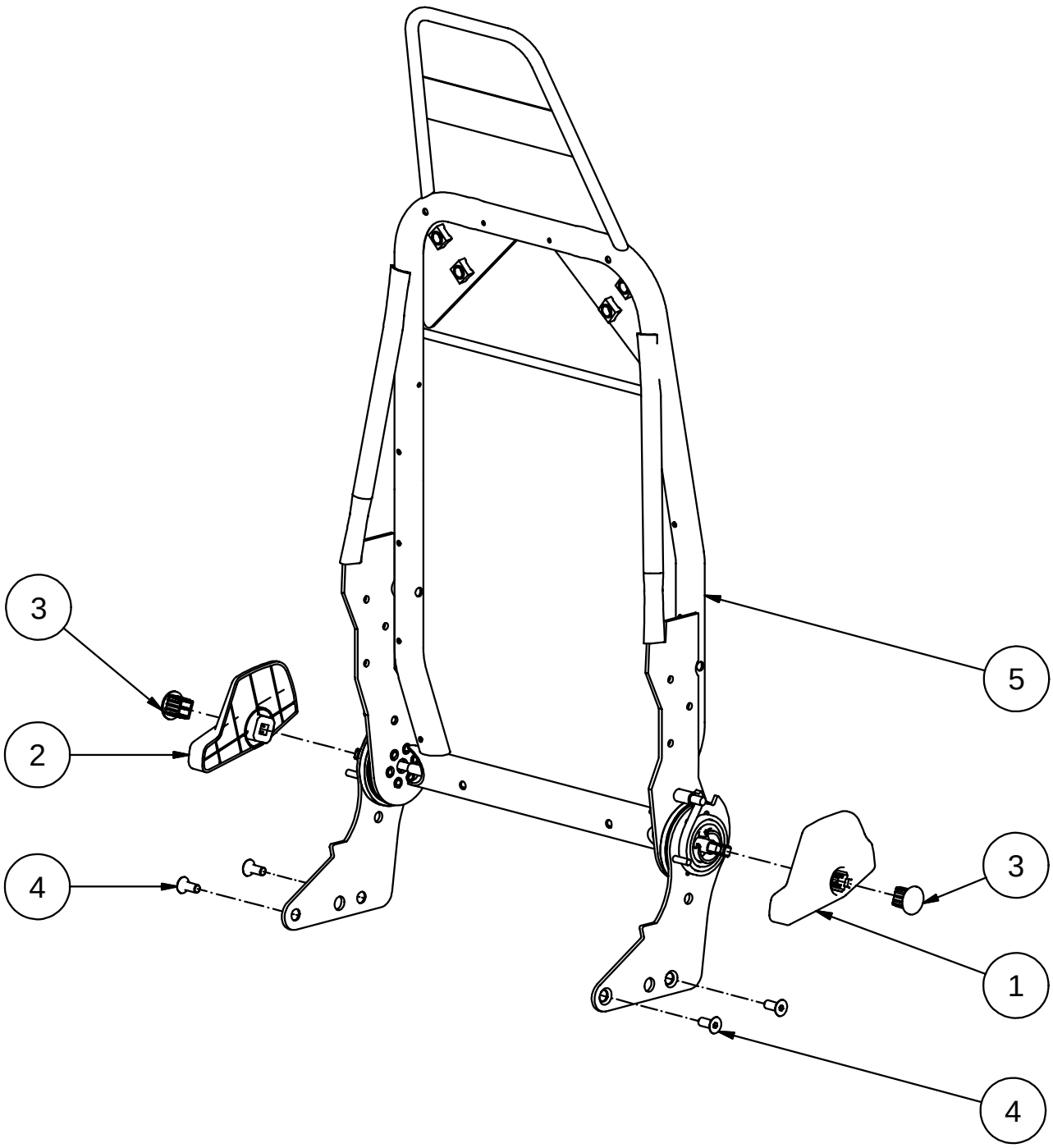

Fig.	Part. No.	Quantity	Description		
1	631010	1	CONTROL LEVER		
2	631011	1	CONTROL LEVER		
3	628834	2	CAP GRIP		
4	310930	4	SCREW MF6S	M8x20	DIN7991 ZN-BL 10.9
5	631103	1	BACKREST HIGH WELDED 3P		

Be-Ge Industri AB • Box 912 • S-572 29 Oskarshamn • Sweden • Phone +46(0)491761800 • Fax +46(0)49181900

BE - GE
Establ. 1934

Parts Replacements List

631311 Backrest kit

Backrest 640, 3-point safety belt
3000, 3100, 3400

Valid from 070601 to

Doc. R1-631311
Date 071105
Rev.
Rev.Date

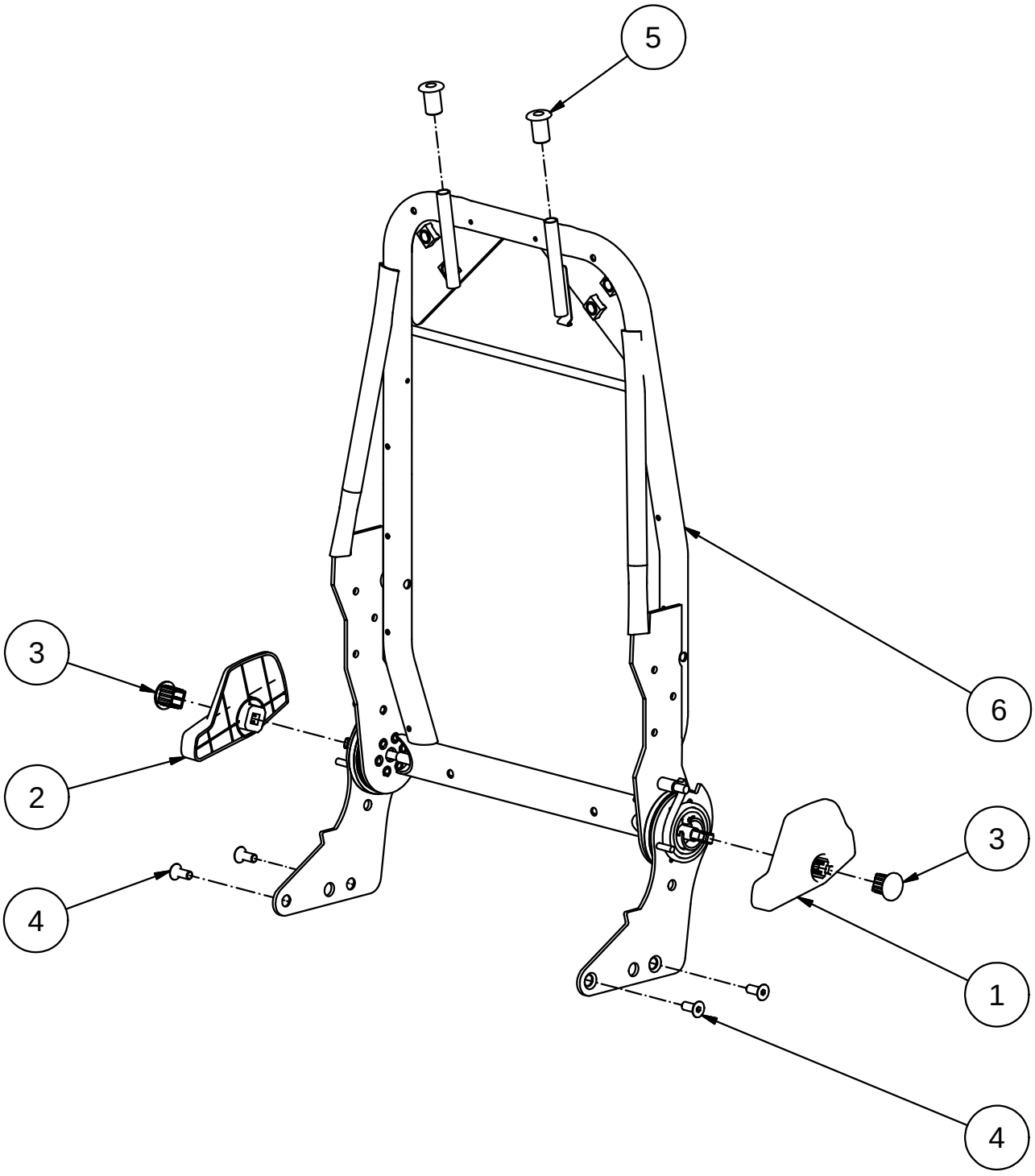

Fig.	Part. No.	Quantity	Description		
1	631010	1	CONTROL LEVER		
2	631011	1	CONTROL LEVER		
3	628834	2	CAP GRIP		
4	310930	4	SCREW MF6S	M8x20	DIN7991 ZN-BL 10.9
5	621514	2	COVER PLUG		
6	631198	1	BACKREST LOW WELDED 3P		

Be-Ge Industri AB • Box 912 • S-572 29 Oskarshamn • Sweden • Phone +46(0)491761800 • Fax +46(0)49181900

BE - GE
Establ. 1934

Parts Replacements List

631387 Backrest support kit

Lumbar support

3000, 3100

Valid from 070601 to

Doc. R1-631387

Date 071105

Rev. 1

Rev.Date 090101

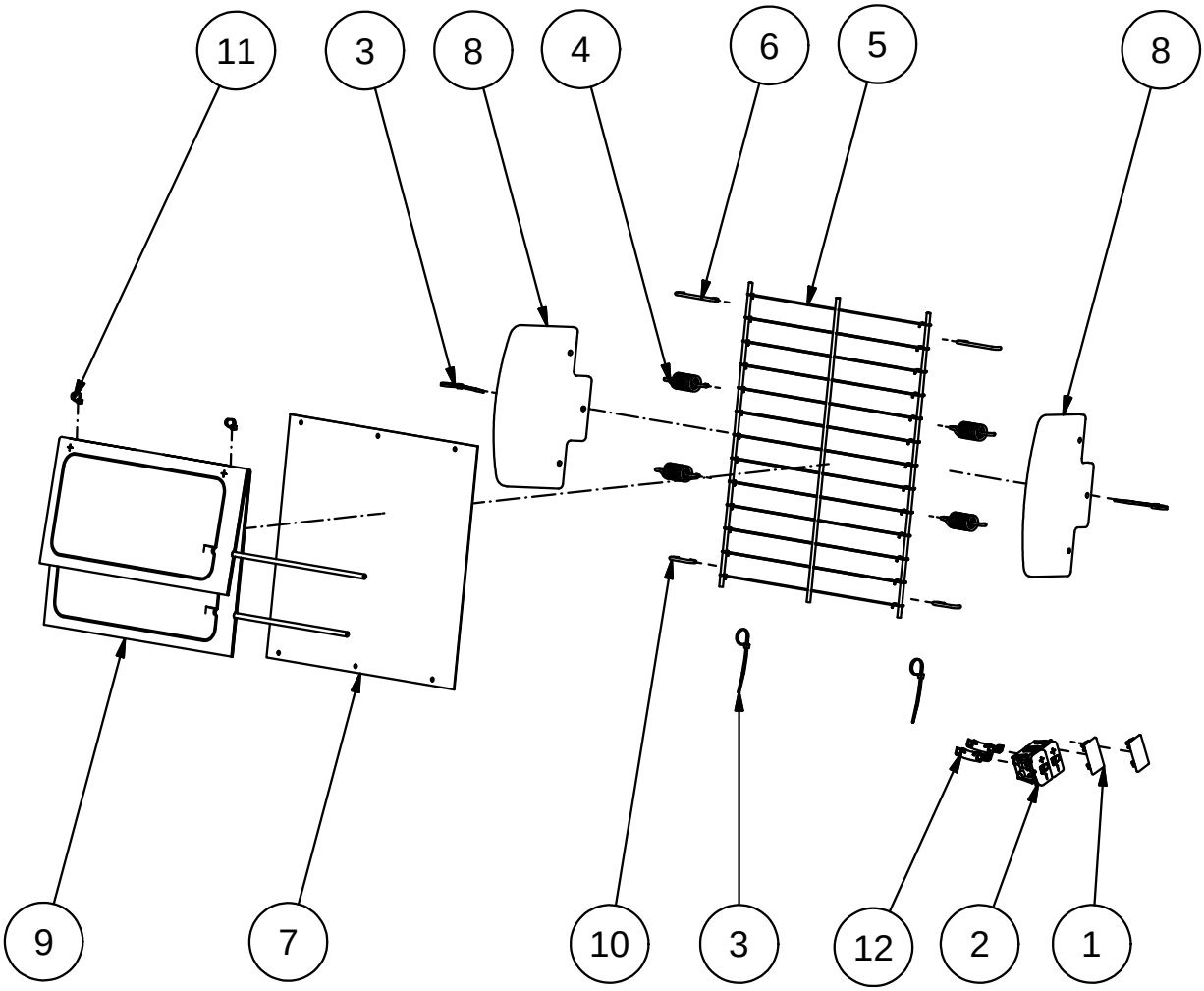

Fig.	Part. No.	Quantity	Description		
1	631226	2	COVER, VALVE		
2	622651	1	VALVE		
3	470109	4	CABLE TIE	3.5x200	BLACK
4	620072	4	SPRING		
5	620148	1	PULLMAFLEX MAT STRAIGHT		
6	622211	2	UPPER LINK		LUMBAR SUPPORT
7	622656	1	PLASTIC PLATE		
8	631121	2	PLATE SIDE SUPPORT		
9	631125	1	BLADDER, LUMBAR SUPPORT		
10	631172	2	HITCH		
11	660109	2	CABLE TIE		
12	631475	2	TUBE ELBOW Ø6, 90°		

Be-Ge Industri AB • Box 912 • S-572 29 Oskarshamn • Sweden • Phone +46(0)491761800 • Fax +46(0)49181900

BE-GE Establ. 1934	Parts Replacements List **631388 Backrest support kit** **Lumbar and side support** **3000, 3100**	Doc. R1-631388 Date 071105 Rev. 1
	Valid from 070601 to	Rev.Date 090101

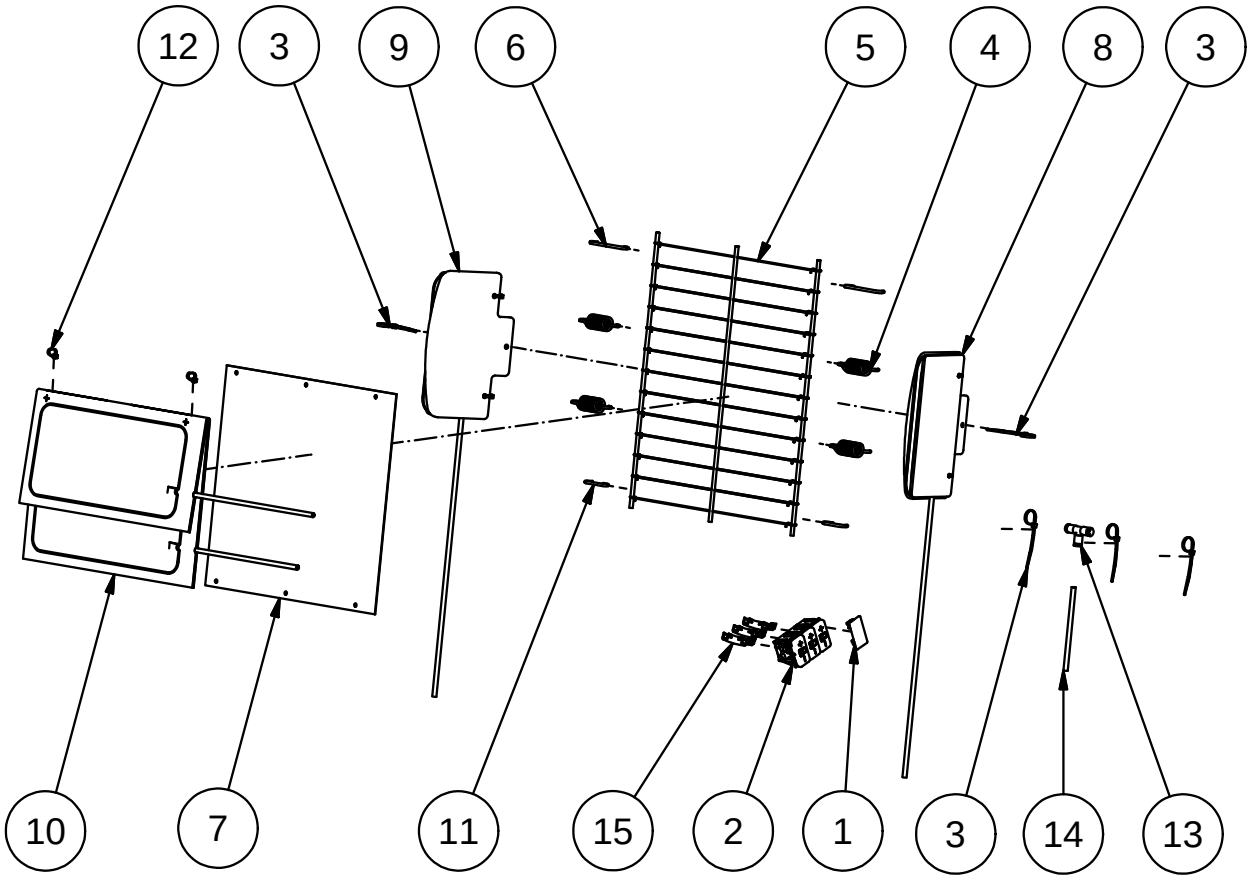

Fig.	Part. No.	Quantity	Description		
1	631226	1	COVER, VALVE		
2	622815	1	VENTIL		
3	470109	5	CABLE TIE	3.5x200	BLACK
4	620072	4	SPRING		
5	620148	1	PULLMAFLEX MAT STRAIGHT		
6	622211	2	UPPER LINK		LUMBAR SUPPORT
7	622656	1	PLASTIC PLATE		
8	631123	1	SIDE SUPPORT ASM		
9	631124	1	SIDE SUPPORT ASM		
10	631125	1	BLADDER, LUMBAR SUPPORT		
11	631172	2	HITCH		
12	660109	2	CABLE TIE		
13	660550	1	ONE TOUCH FITTNING	5 mm	TEE
14	660551	1	TUBE	5x3.1	WHITE (PUR)
15	631475	3	TUBE ELBOW Ø6, 90°		

Be-Ge Industri AB • Box 912 • S-572 29 Oskarshamn • Sweden • Phone +46(0)491761800 • Fax +46(0)49181900

BE-GE
Establ. 1934

Parts Replacements List

631389 Backrest support kit

Lumbar, side and shoulder support

3000, 3100

Valid from 070601 to

Doc.	R1-631389
Date	071105
Rev.	1
Rev.Date	090101

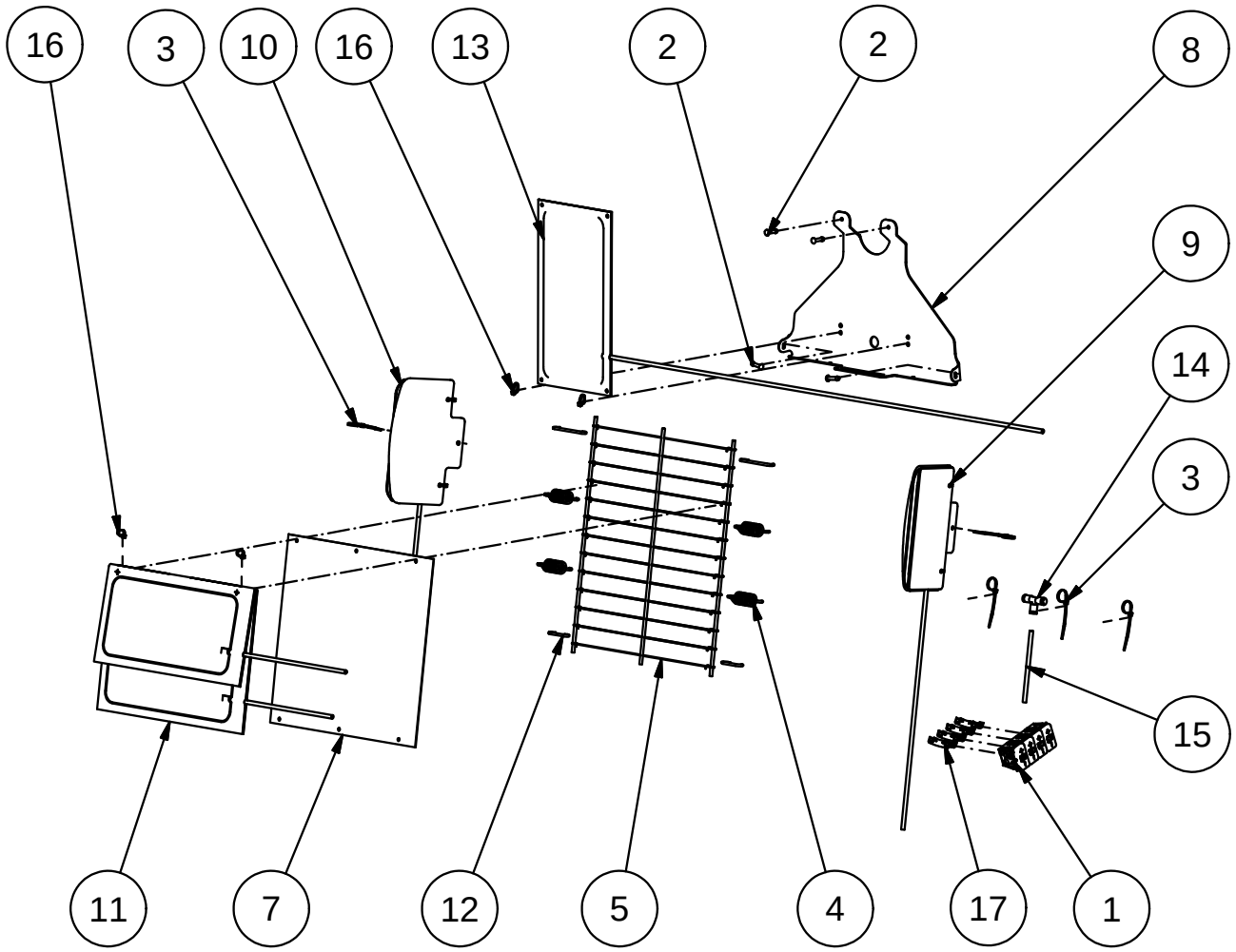

Fig.	Part. No.	Quantity	Description		
1	631132	2	VALVE		
2	500221	4	RIVET ST/ST	4.0x16	SP/D BS
3	470109	5	CABLE TIE	3.5x200	BLACK
4	620072	4	SPRING		
5	620148	1	PULLMAFLEX MAT STRAIGHT		
6	622211	2	UPPER LINK		LUMBAR SUPPORT
7	622656	1	PLASTIC PLATE		
8	631119	1	PLATE, SHOULDER ADJ		
9	631123	1	SIDE SUPPORT ASM		
10	631124	1	SIDE SUPPORT ASM		
11	631125	1	BLADDER, LUMBAR SUPPORT		
12	631172	2	HITCH		
13	631426	1	BLADDER SHOULDERSUPPORT		
14	660550	1	ONE TOUCH FITTNING	5 mm	TEE
15	660551	1	TUBE	5x3.1	WHITE (PUR)
16	660109	4	CABLE TIE		
17	631475	4	TUBE ELBOW Ø6, 90°		

Be-Ge Industri AB • Box 912 • S-572 29 Oskarshamn • Sweden • Phone +46(0)491761800 • Fax +46(0)49181900

BE - GE
Establ. 1934

Parts Replacements List

631598 Backrest support kit XSS

Lumbar support

3000, 3100

Valid from 090101 to

Doc. R1-631598

Date 090101

Rev.

Rev.Date

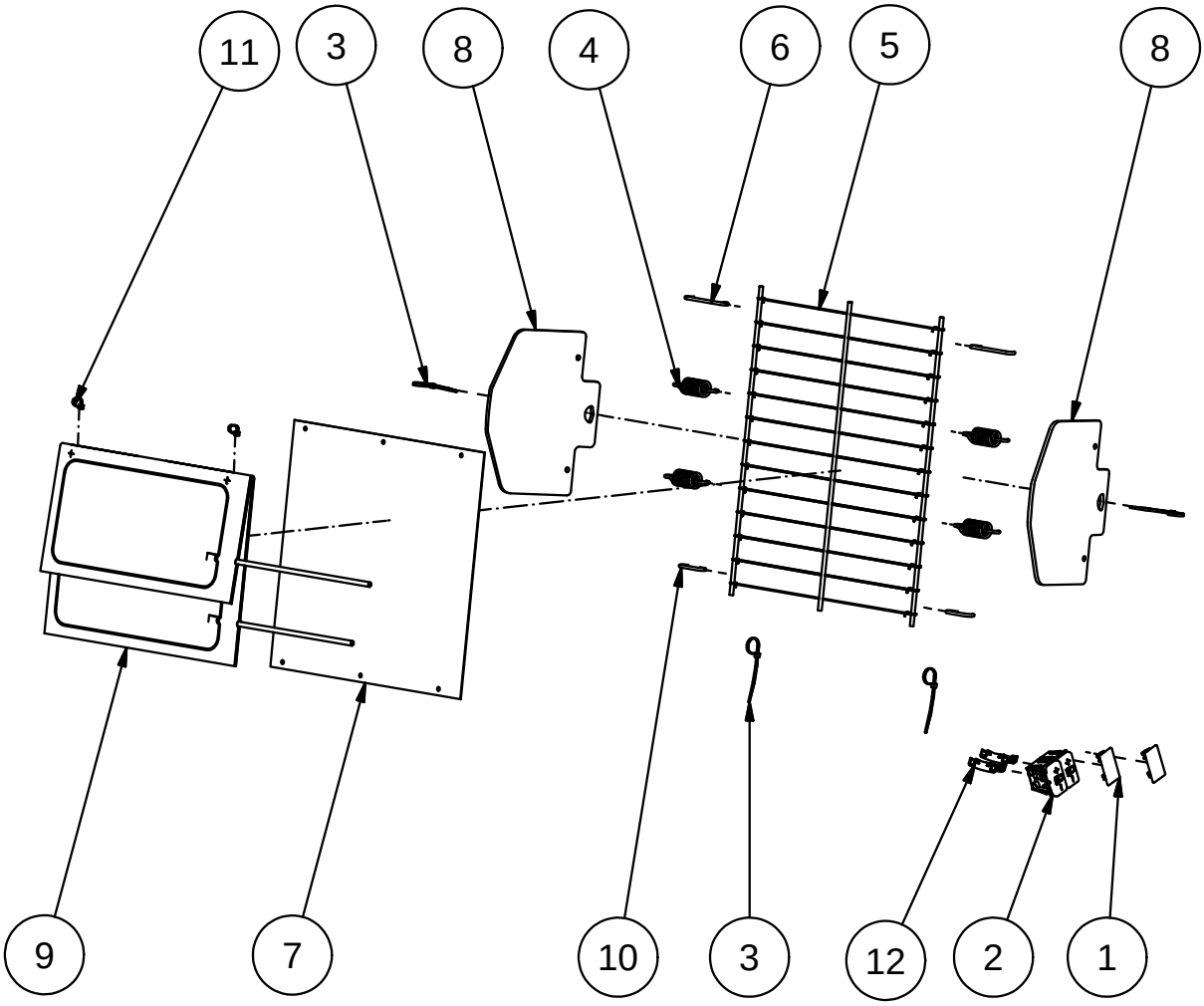

Fig.	Part. No.	Quantity	Description		
1	631226	2	COVER, VALVE		
2	622651	1	VALVE		
3	470109	4	CABLE TIE	3.5x200	BLACK
4	620072	4	SPRING		
5	620148	1	PULLMAFLEX MAT STRAIGHT		
6	622211	2	UPPER LINK		LUMBAR SUPPORT
7	622656	1	PLASTIC PLATE		
8	631455	2	PLATE SIDE SUPPORT XSS		
9	631125	1	BLADDER, LUMBAR SUPPORT		
10	631172	2	HITCH		
11	660109	2	CABLE TIE		
12	631475	2	TUBE ELBOW Ø6, 90°		

Be-Ge Industri AB • Box 912 • S-572 29 Oskarshamn • Sweden • Phone +46(0)491761800 • Fax +46(0)49181900

BE - GE
Establ. 1934

Parts Replacements List

631599 Backrest support kit XSS

Lumbar and side support

3000, 3100

Valid from 090101 to

Doc. R1-631599

Date 090101

Rev.

Rev.Date

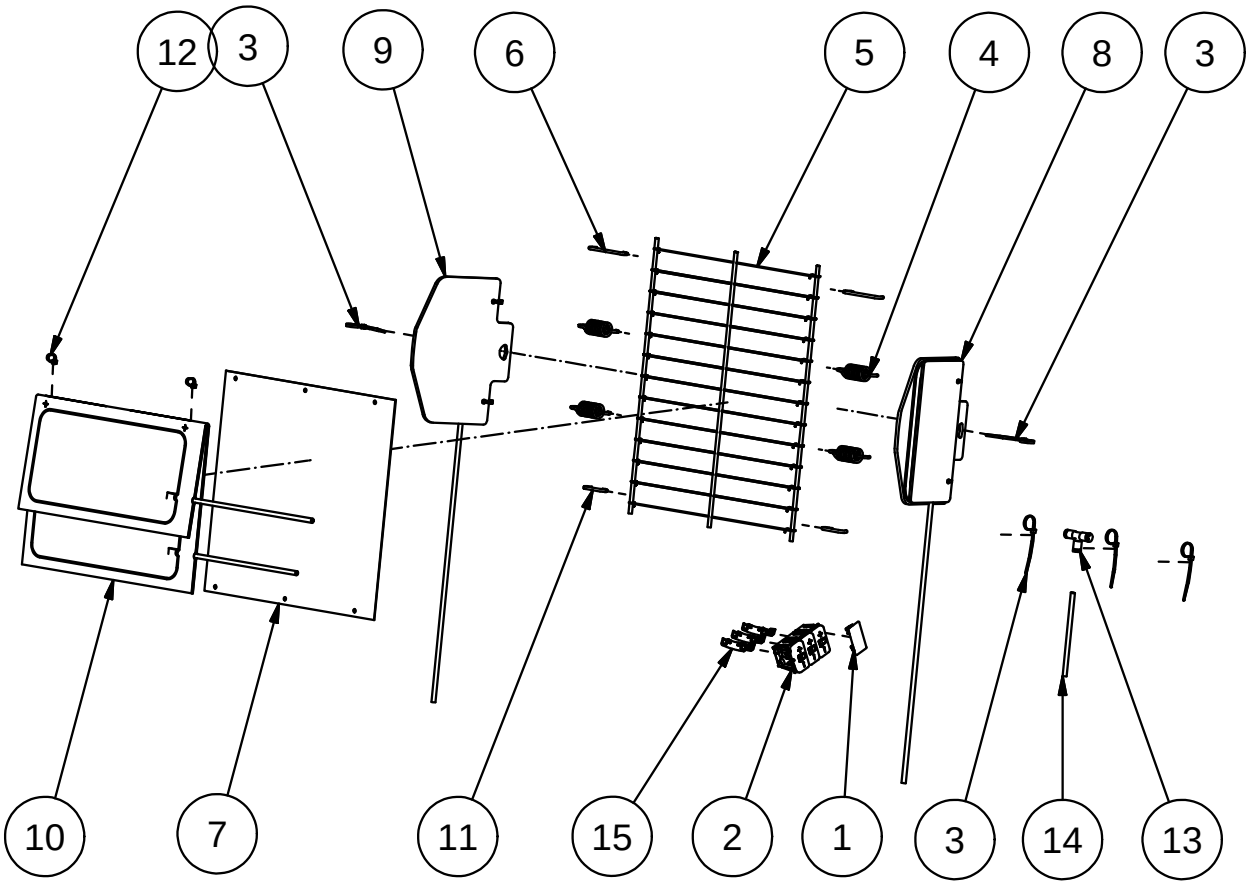

Fig.	Part. No.	Quantity	Description		
1	631226	1	COVER, VALVE		
2	622815	1	VENTIL		
3	470109	5	CABLE TIE	3.5x200	BLACK
4	620072	4	SPRING		
5	620148	1	PULLMAFLEX MAT STRAIGHT		
6	622211	2	UPPER LINK		LUMBAR SUPPORT
7	622656	1	PLASTIC PLATE		
8	631456	1	SIDE SUPPORT XSS		LEFT
9	631457	1	SIDE SUPPORT XSS		RIGHT
10	631125	1	BLADDER, LUMBAR SUPPORT		
11	631172	2	HITCH		
12	660109	2	CABLE TIE		
13	660550	1	ONE TOUCH FITTNING	5 mm	TEE
14	660551	1	TUBE	5x3.1	WHITE (PUR)
15	631475	3	TUBE ELBOW Ø6, 90°		

Be-Ge Industri AB • Box 912 • S-572 29 Oskarshamn • Sweden • Phone +46(0)491761800 • Fax +46(0)49181900

BE - GE
Establ. 1934

Parts Replacements List

631589 Backrest support kit

Lumbar support

3000, 3100 Built-in compressor

Valid from 090101 to

Doc. R1-631589

Date 090101

Rev.

Rev.Date

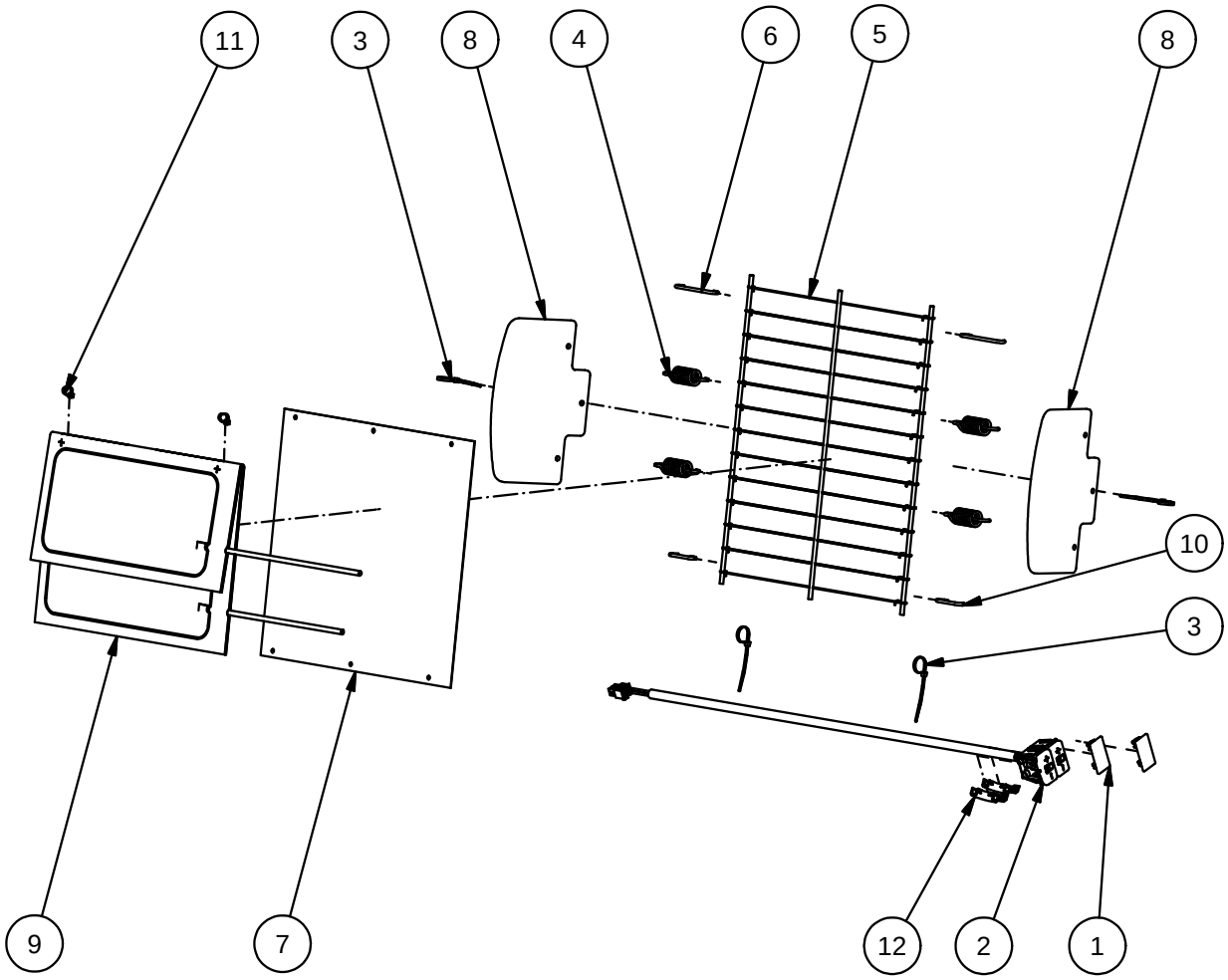

Fig.	Part. No.	Quantity	Description		
1	631226	2	COVER, VALVE		
2	631506	1	VALVE MICRO SWITCH, DOUBLE		
3	470109	4	CABLE TIE	3.5x200	BLACK
4	620072	4	SPRING		
5	620148	1	PULLMAFLEX MAT STRAIGHT		
6	622211	2	UPPER LINK		LUMBAR SUPPORT
7	622656	1	PLASTIC PLATE		
8	631121	2	PLATE SIDE SUPPORT		
9	631125	1	BLADDER, LUMBAR SUPPORT		
10	631172	2	HITCH		
11	660109	2	CABLE TIE		
12	631475	2	TUBE ELBOW Ø6, 90°		

Be-Ge Industri AB • Box 912 • S-572 29 Oskarshamn • Sweden • Phone +46(0)491761800 • Fax +46(0)49181900

BE - GE
Establ. 1934

Parts Replacements List

631590 Backrest support kit

Lumbar and side support

3000, 3100 Built-in compressor

Valid from 090101 to

Doc. R1-631590

Date 090101

Rev.

Rev.Date

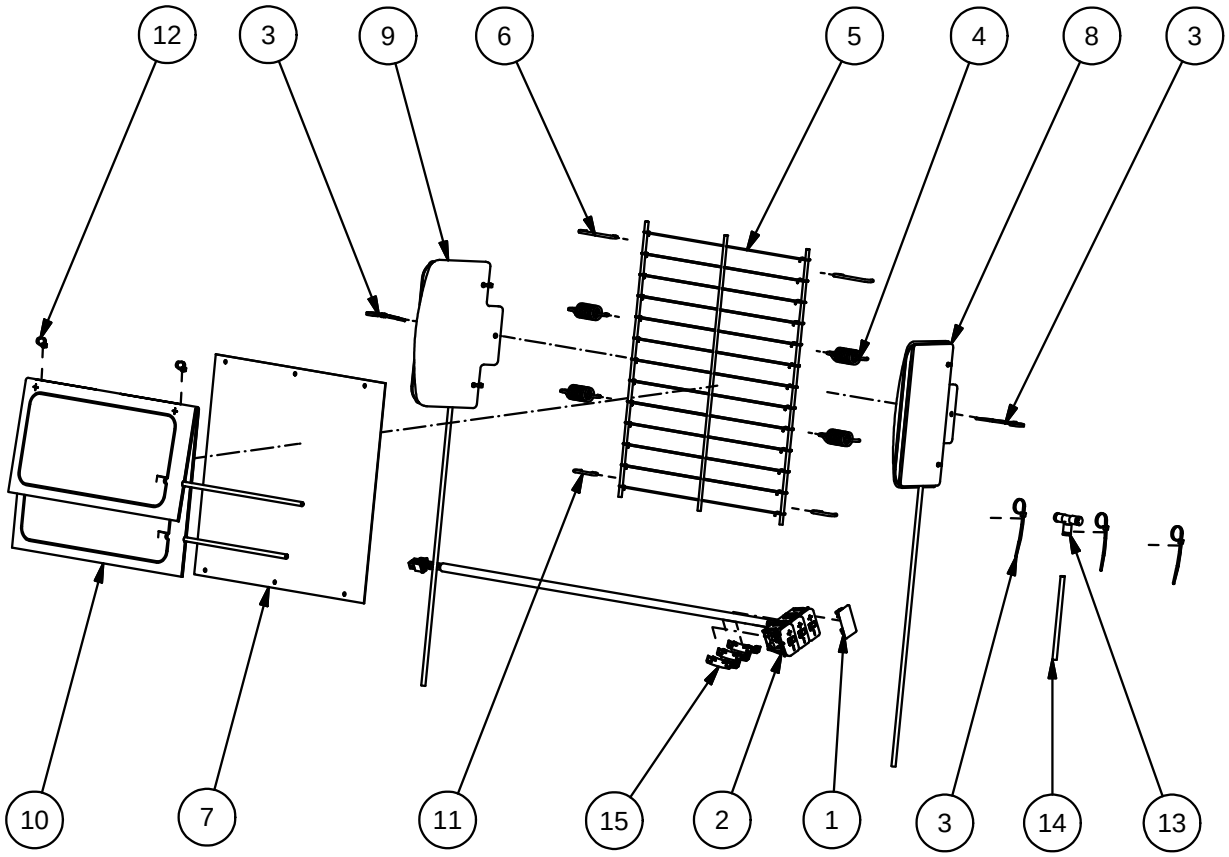

Fig.	Part. No.	Quantity	Description		
1	631226	1	COVER, VALVE		
2	631507	1	VALVE MICRO SWITCH, TRIPLE		
3	470109	5	CABLE TIE	3.5x200	BLACK
4	620072	4	SPRING		
5	620148	1	PULLMAFLEX MAT STRAIGHT		
6	622211	2	UPPER LINK		LUMBAR SUPPORT
7	622656	1	PLASTIC PLATE		
8	631123	1	SIDE SUPPORT ASM		
9	631124	1	SIDE SUPPORT ASM		
10	631125	1	BLADDER, LUMBAR SUPPORT		
11	631172	2	HITCH		
12	660109	2	CABLE TIE		
13	660550	1	ONE TOUCH FITTNING	5 mm	TEE
14	660551	1	TUBE	5x3.1	WHITE (PUR)
15	631475	3	TUBE ELBOW Ø6, 90°		

Be-Ge Industri AB • Box 912 • S-572 29 Oskarshamn • Sweden • Phone +46(0)491761800 • Fax +46(0)49181900

BE - GE
Establ. 1934

Parts Replacements List

631591 Backrest support kit

Lumbar, side and shoulder support

3000, 3100 Built-in compressor

Valid from 090101 to

Doc.	R1-631591
Date	090101
Rev.	
Rev.Date	

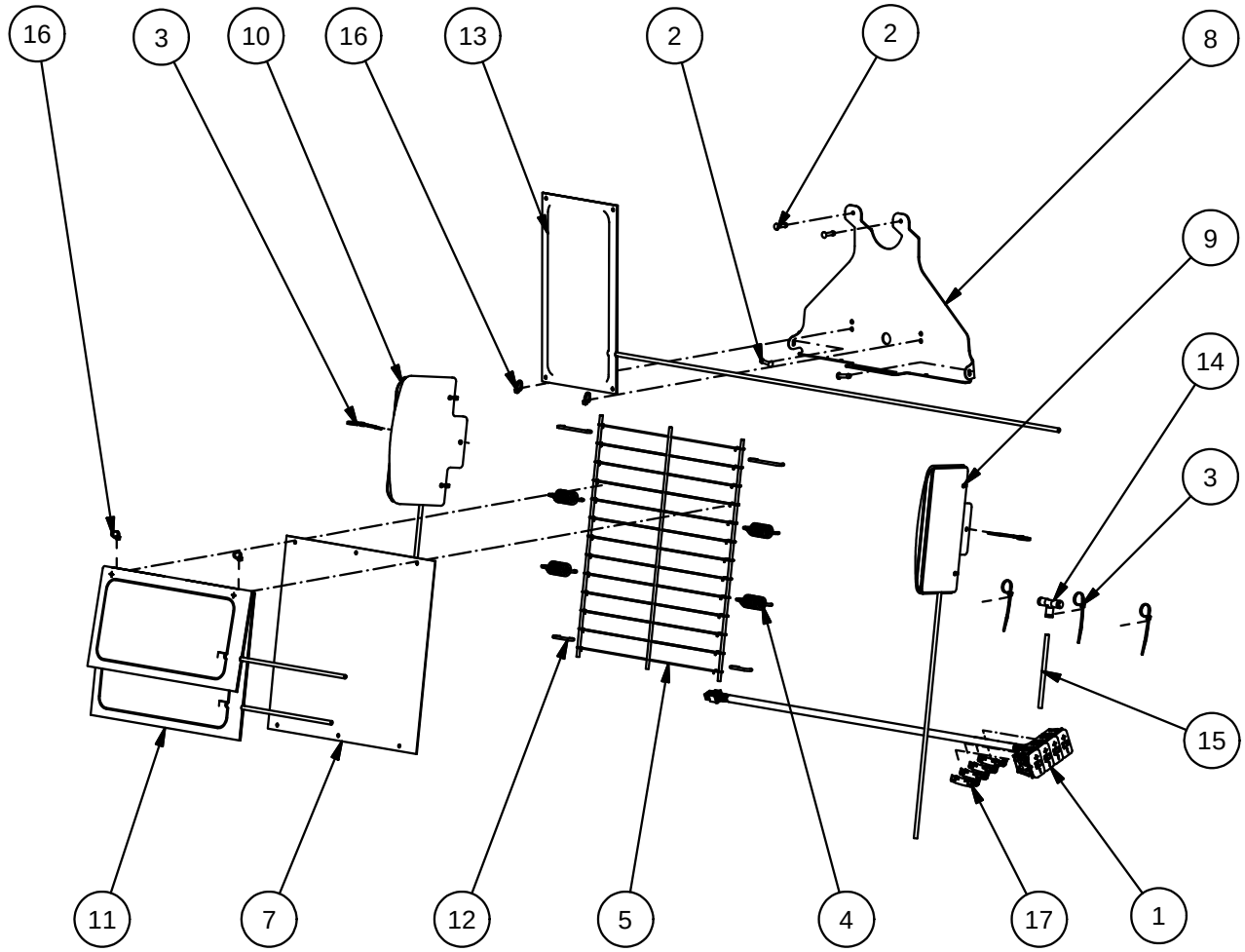

Fig.	Part. No.	Quantity	Description		
1	631516	2	VALVE MICRO SWITCH, QUAD		
2	500221	4	RIVET ST/ST	4.0x16	SP/D BS
3	470109	5	CABLE TIE	3.5x200	BLACK
4	620072	4	SPRING		
5	620148	1	PULLMAFLEX MAT STRAIGHT		
6	622211	2	UPPER LINK		LUMBAR SUPPORT
7	622656	1	PLASTIC PLATE		
8	631119	1	PLATE, SHOULDER ADJ		
9	631123	1	SIDE SUPPORT ASM		
10	631124	1	SIDE SUPPORT ASM		
11	631125	1	BLADDER, LUMBAR SUPPORT		
12	631172	2	HITCH		
13	631426	1	BLADDER SHOULDERSUPPORT		
14	660550	1	ONE TOUCH FITTNING	5 mm	TEE
15	660551	1	TUBE	5x3.1	WHITE (PUR)
16	660109	4	CABLE TIE		
17	631475	4	TUBE ELBOW Ø6, 90°		

Be-Ge Industri AB • Box 912 • S-572 29 Oskarshamn • Sweden • Phone +46(0)491761800 • Fax +46(0)49181900

BE - GE Establ. 1934	Parts Replacements List **631601 Backrest support kit XSS** **Lumbar support** **3000, 3100 Built-in compressor**	Doc. R1-631601 Date 090101 Rev.
	Valid from 090101 to	Rev.Date

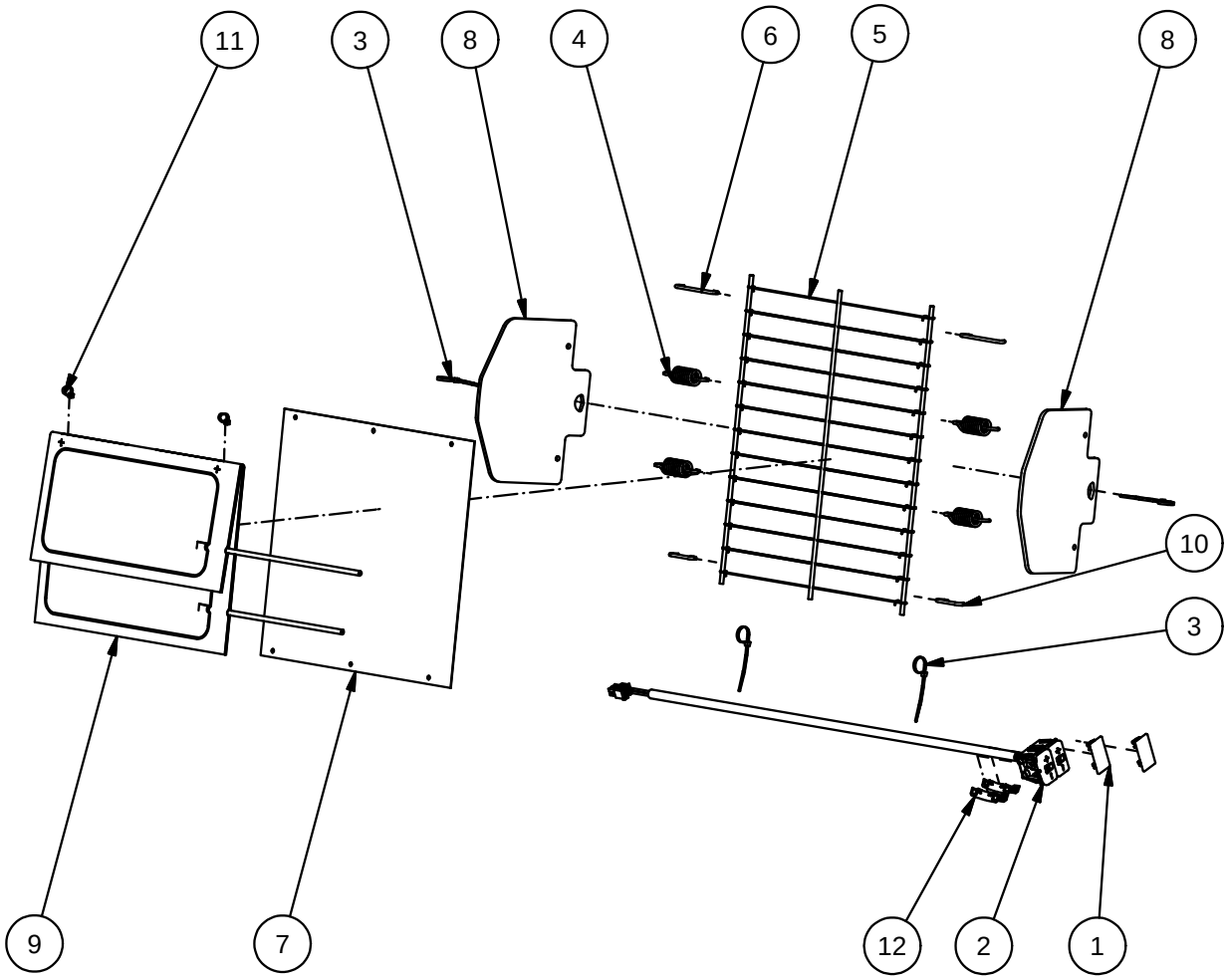

Fig.	Part. No.	Quantity	Description		
1	631226	2	COVER, VALVE		
2	631506	1	VALVE MICRO SWITCH, DOUBLE		
3	470109	4	CABLE TIE	3.5x200	BLACK
4	620072	4	SPRING		
5	620148	1	PULLMAFLEX MAT STRAIGHT		
6	622211	2	UPPER LINK		LUMBAR SUPPORT
7	622656	1	PLASTIC PLATE		
8	631455	2	PLATE SIDE SUPPORT XSS		
9	631125	1	BLADDER, LUMBAR SUPPORT		
10	631172	2	HITCH		
11	660109	2	CABLE TIE		
12	631475	2	TUBE ELBOW Ø6, 90°		

Be-Ge Industri AB • Box 912 • S-572 29 Oskarshamn • Sweden • Phone +46(0)491761800 • Fax +46(0)49181900

BE-GE Establ. 1934	Parts Replacements List **631602 Backrest support kit XSS** **Lumbar and side support** **3000, 3100 Built-in compressor**	Doc. R1-631602 Date 090101 Rev.
	Valid from 090101 to	Rev.Date

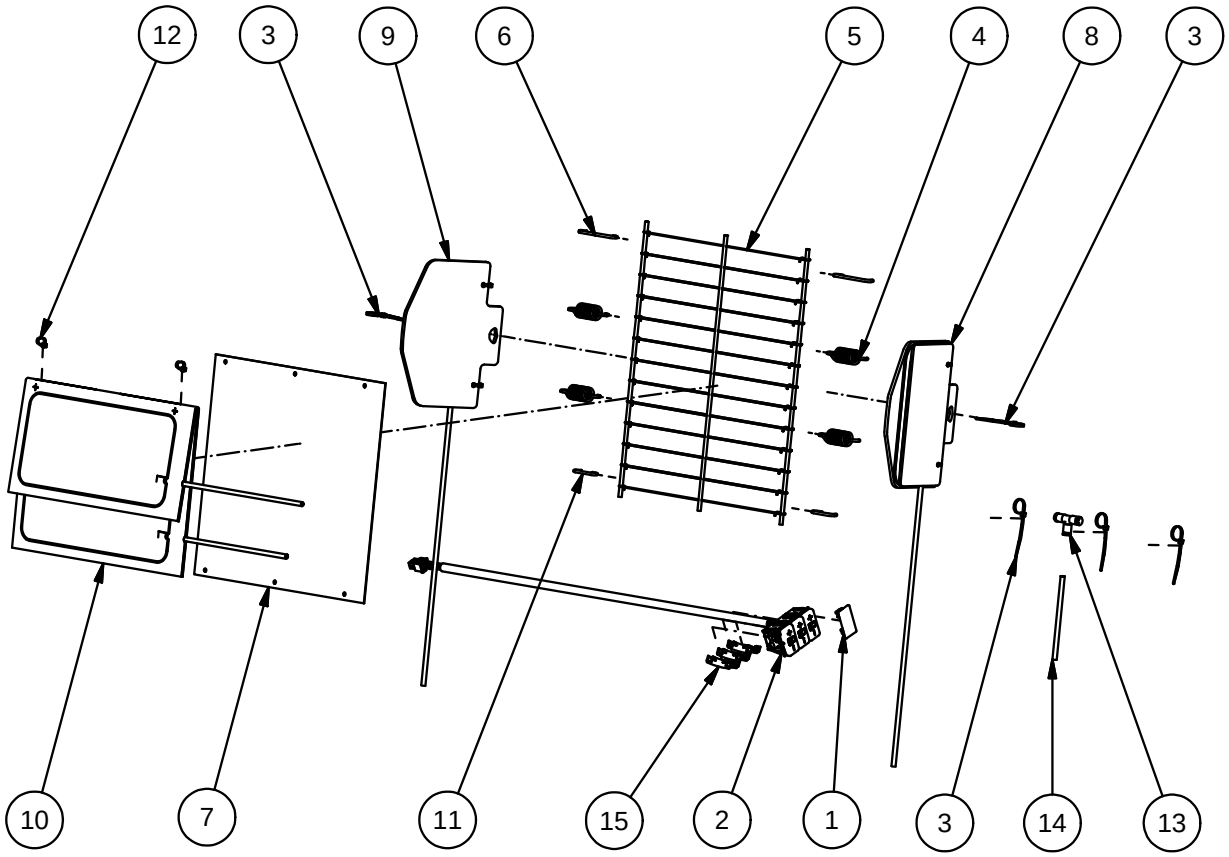

Fig.	Part. No.	Quantity	Description		
1	631226	1	COVER, VALVE		
2	631507	1	VALVE MICRO SWITCH, TRIPLE		
3	470109	5	CABLE TIE	3.5x200	BLACK
4	620072	4	SPRING		
5	620148	1	PULLMAFLEX MAT STRAIGHT		
6	622211	2	UPPER LINK		LUMBAR SUPPORT
7	622656	1	PLASTIC PLATE		
8	631456	1	SIDE SUPPORT XSS		LEFT
9	631457	1	SIDE SUPPORT XSS		RIGHT
10	631125	1	BLADDER, LUMBAR SUPPORT		
11	631172	2	HITCH		
12	660109	2	CABLE TIE		
13	660550	1	ONE TOUCH FITTNING	5 mm	TEE
14	660551	1	TUBE	5x3.1	WHITE (PUR)
15	631475	3	TUBE ELBOW Ø6, 90°		

Be-Ge Industri AB • Box 912 • S-572 29 Oskarshamn • Sweden • Phone +46(0)491761800 • Fax +46(0)49181900

BE - GE
Establ. 1934

Parts Replacements List

631324 Trim kit NIGHTFALL

Seat cushion

3000, 3100, 3400

Valid from 070601 to

Doc. R1-631324

Date 071105

Rev.

Rev.Date

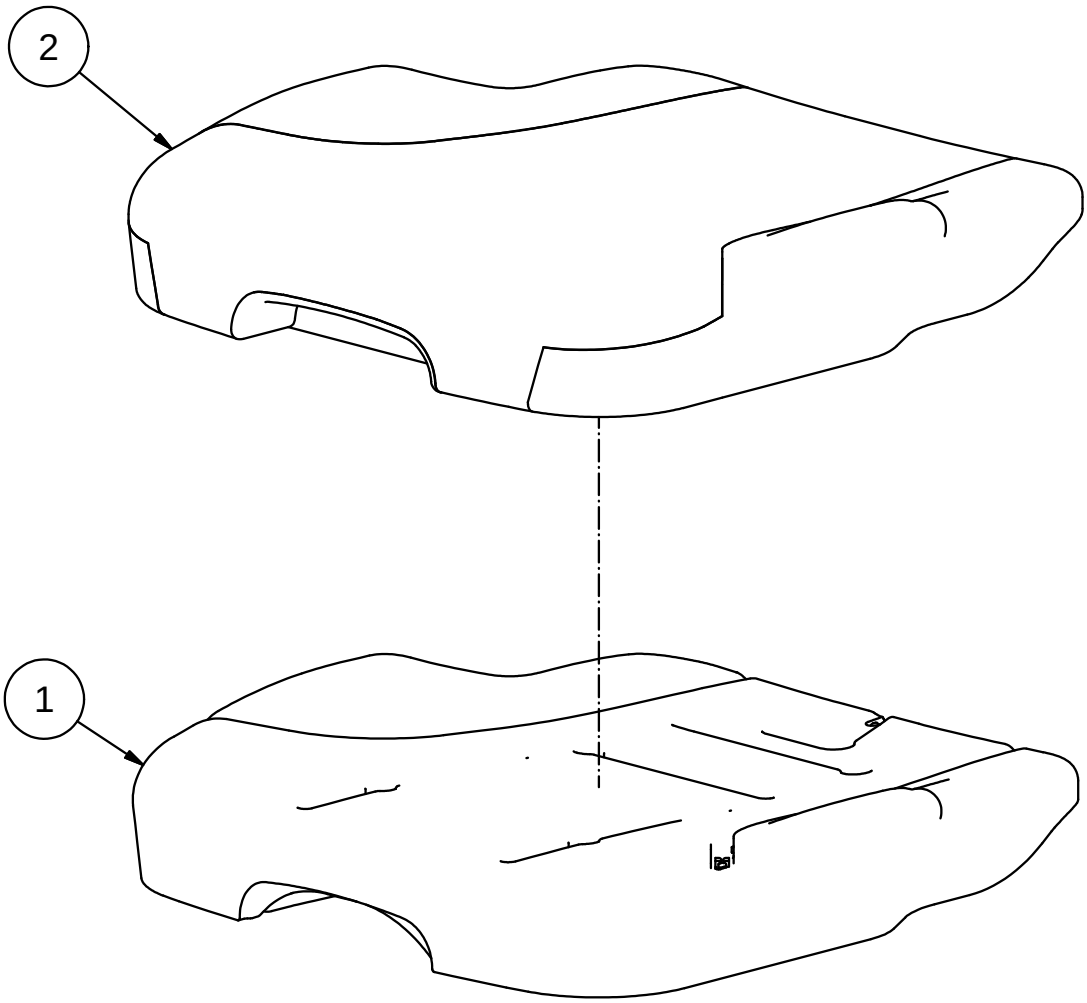

Fig.	Part. No.	Quantity	Description		
1	631116	1	SEAT FOAM		
2	641582	1	TRIM SEAT		NIGHTFALL

Be-Ge Industri AB • Box 912 • S-572 29 Oskarshamn • Sweden • Phone +46(0)491761800 • Fax +46(0)49181900

BE-GE Establ. 1934	Parts Replacements List **631325 Trim kit NIGHTFALL** **Comfort seat cushion** **3000, 3100, 3400**	Doc. R1-631325 Date 071105 Rev.
	Valid from 070601 to	Rev.Date

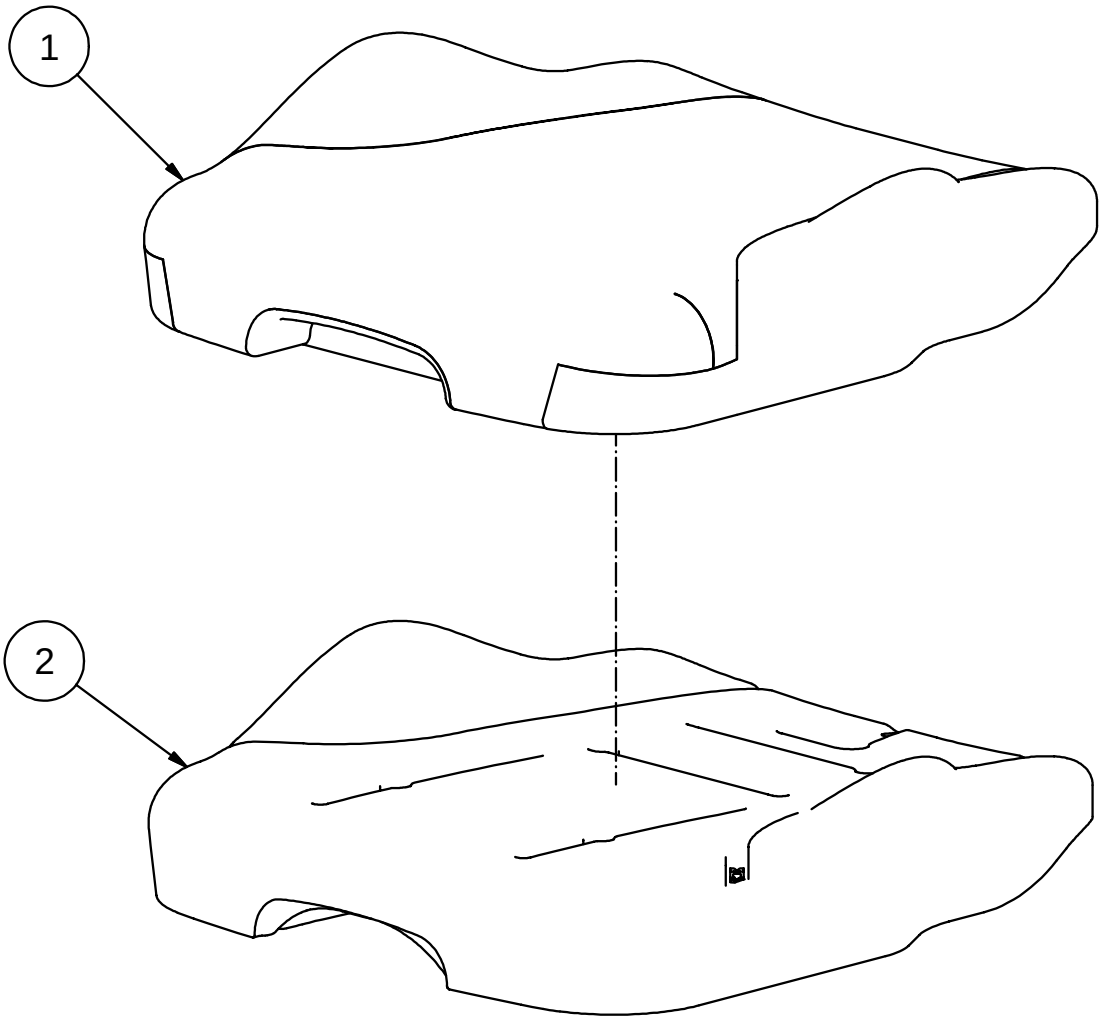

Fig.	Part. No.	Quantity	Description		
1	641583	1	TRIM SEAT COMFORT		NIGHTFALL
2	631204	1	SEAT FOAM, COMFORT		

Be-Ge Industri AB • Box 912 • S-572 29 Oskarshamn • Sweden • Phone +46(0)491761800 • Fax +46(0)49181900

BE - GE
Establ. 1934

Parts Replacements List

631603 Trim kit NIGHTFALL XSS

Seat cushion

3000, 3100, 3400

Valid from 090101 to

Doc. R1-631603

Date 090101

Rev.

Rev.Date

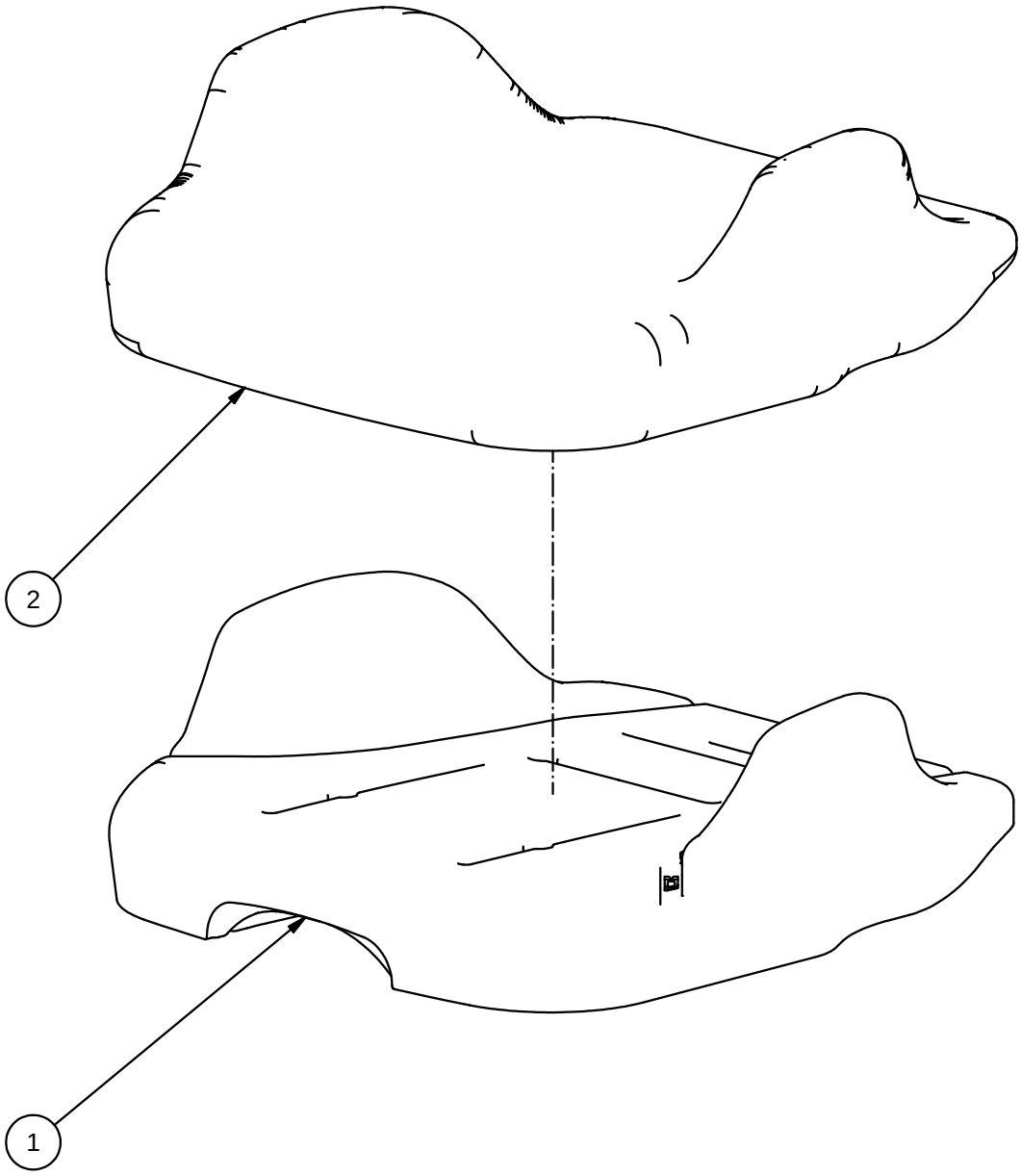

Fig.	Part. No.	Quantity	Description		
1	631202	1	SEAT FOAM XSS		
2	641672	1	TRIM SEAT XSS		NIGHTFALL

Be-Ge Industri AB • Box 912 • S-572 29 Oskarshamn • Sweden • Phone +46(0)491761800 • Fax +46(0)49181900

BE - GE
Establ. 1934

Parts Replacements List

631394 Trim kit ALLIANCE

Seat cushion

3000, 3100, 3400

Valid from 070601 to

Doc. R1-631394

Date 071105

Rev.

Rev.Date

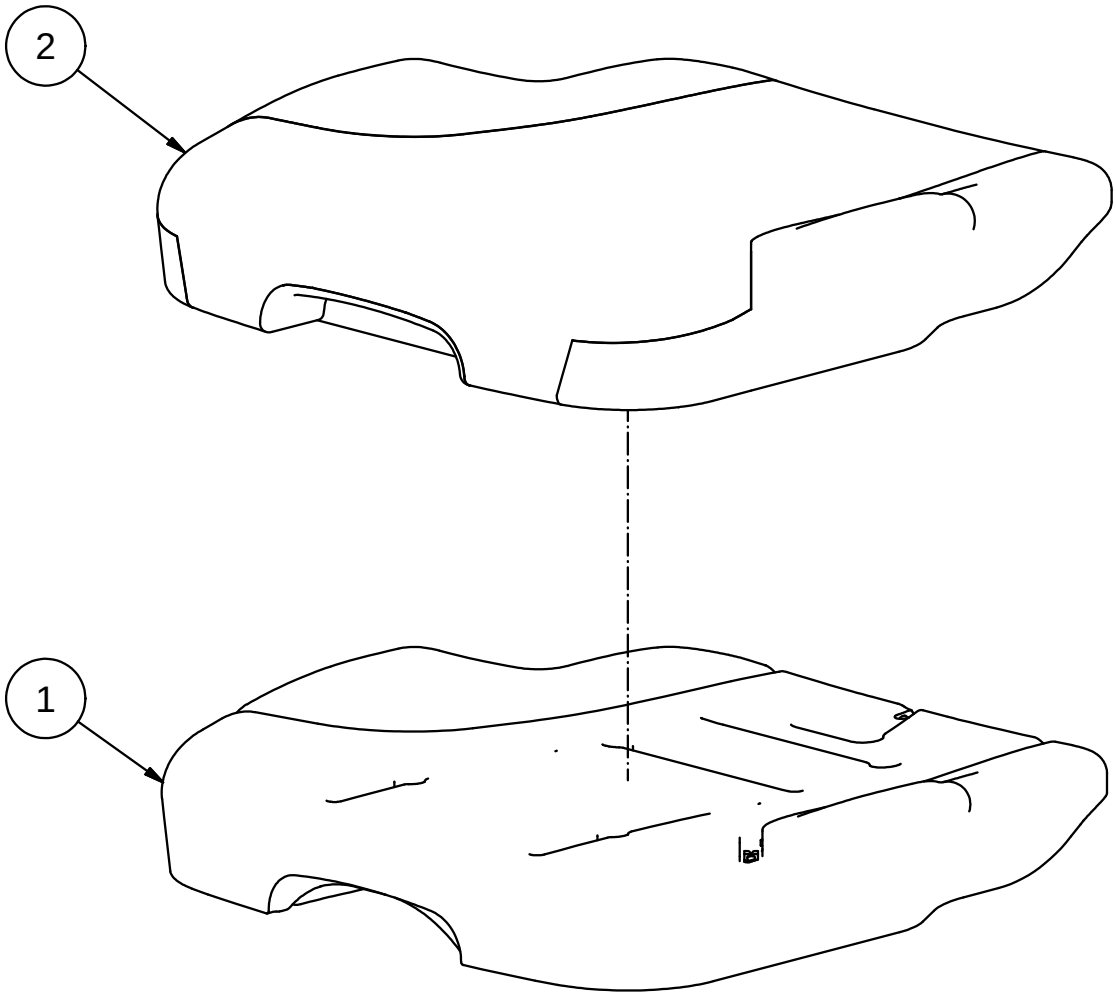

Fig.	Part. No.	Quantity	Description		
1	631116	1	SEAT FOAM		
2	641582	1	TRIM SEAT		ALLIANCE

Be-Ge Industri AB • Box 912 • S-572 29 Oskarshamn • Sweden • Phone +46(0)491761800 • Fax +46(0)49181900

BE-GE Establ. 1934	Parts Replacements List **631395 Trim kit ALLIANCE** **Comfort seat cushion** **3000, 3100, 3400**	Doc. R1-631395 Date 071105 Rev.
	Valid from 070601 to	Rev.Date

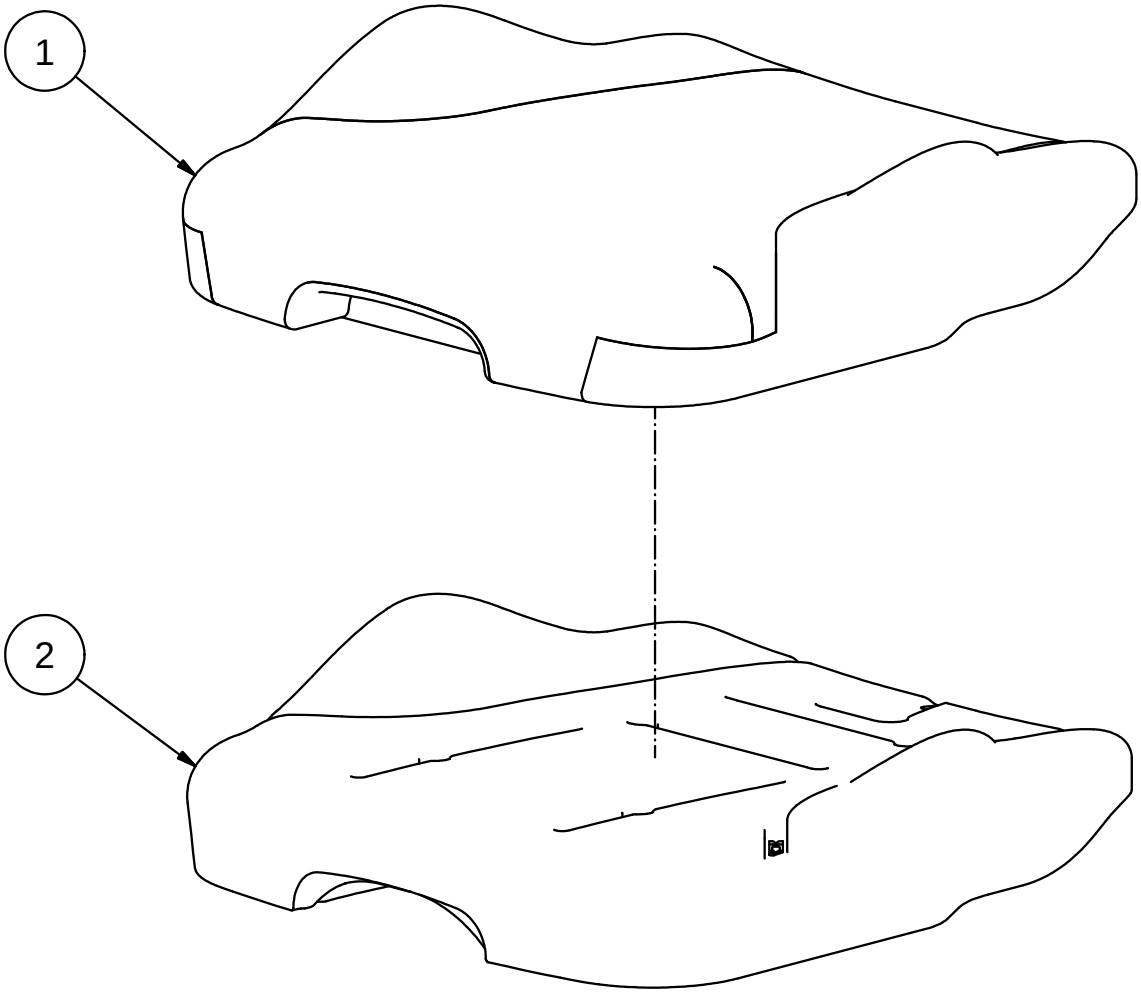

Fig.	Part. No.	Quantity	Description		
1	641583	1	TRIM SEAT COMFORT		ALLIANCE
2	631204	1	SEAT FOAM, COMFORT		

Be-Ge Industri AB • Box 912 • S-572 29 Oskarshamn • Sweden • Phone +46(0)491761800 • Fax +46(0)49181900

BE - GE Establ. 1934	Parts Replacements List **631428 Trim kit LEATHER BLACK/GREY** **Seat cushion 3000, 3100, 3400**	Doc. R1-631428 Date 071105 Rev.
	Valid from 070601 to	Rev.Date

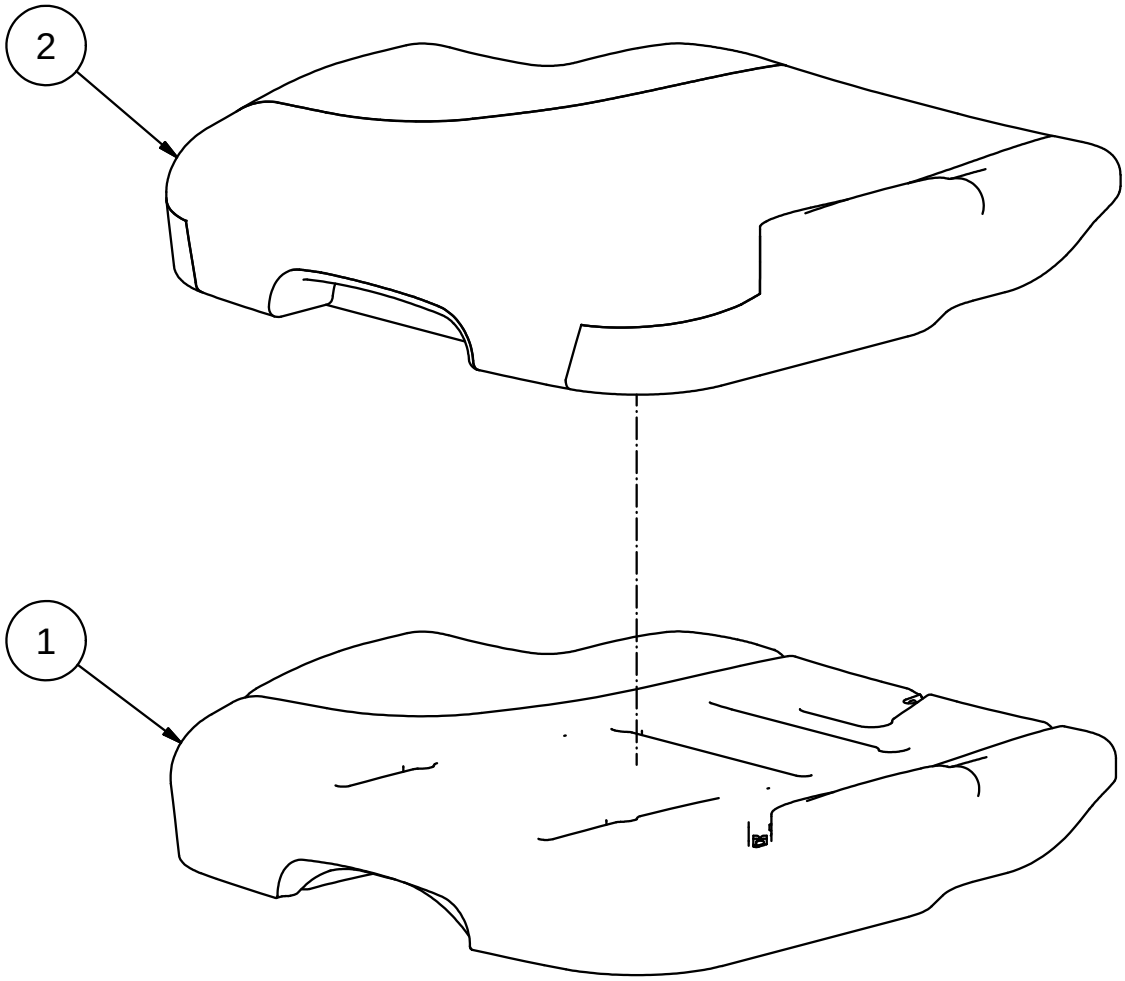

Fig.	Part. No.	Quantity	Description		
1	631116	1	SEAT FOAM		
2	641636	1	TRIM SEAT		LEATHER BLACK/GREY

Be-Ge Industri AB • Box 912 • S-572 29 Oskarshamn • Sweden • Phone +46(0)491761800 • Fax +46(0)49181900

BE - GE
Establ. 1934

Parts Replacements List

631429 Trim kit LEATHER BLACK/GREY

Comfort seat cushion, 3000, 3100, 3400

Valid from 070601 to

Doc. R1-631429

Date 071105

Rev.

Rev.Date

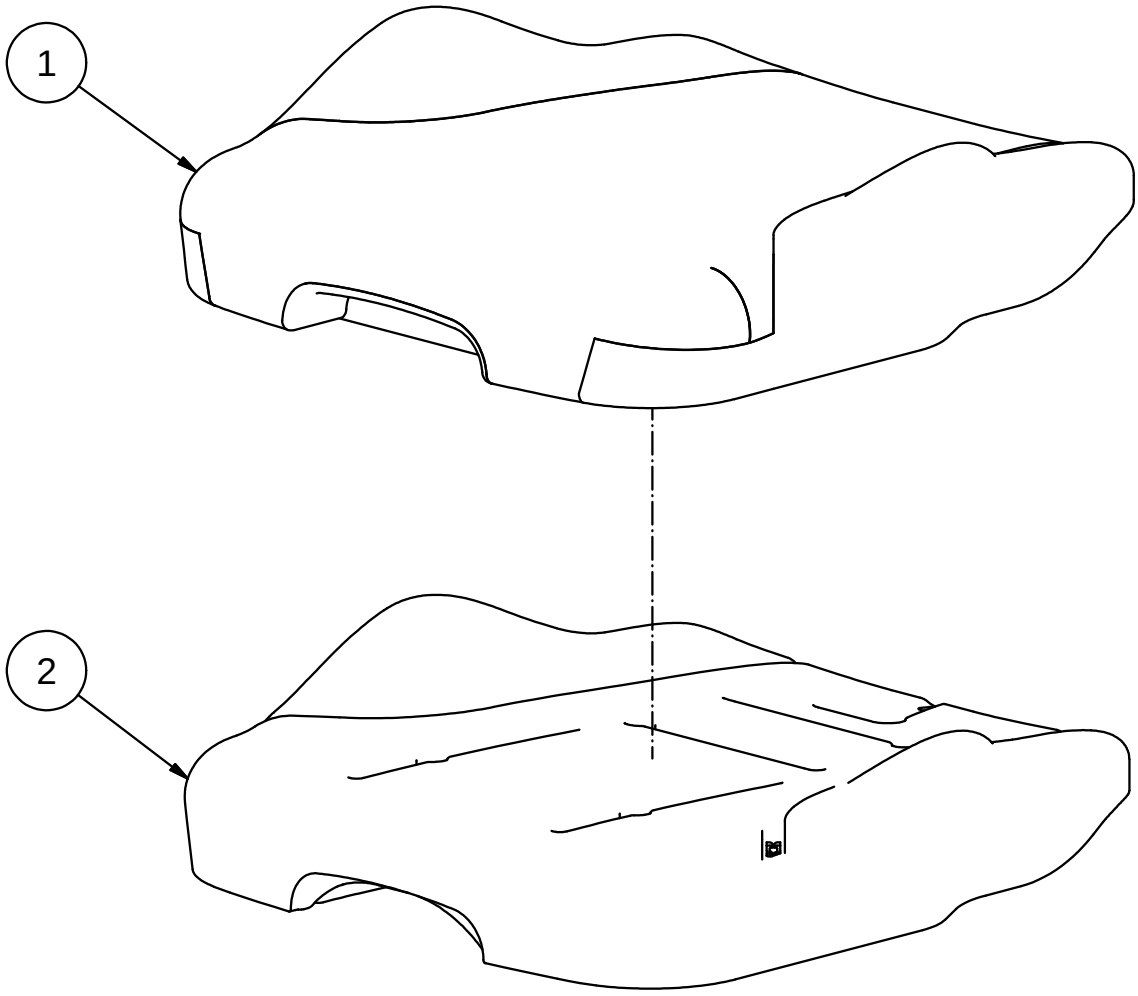

Fig.	Part. No.	Quantity	Description		
1	641637	1	TRIM SEAT COMFORT		LEATHER BLACK/GREY
2	631204	1	SEAT FOAM, COMFORT		

Be-Ge Industri AB • Box 912 • S-572 29 Oskarshamn • Sweden • Phone +46(0)491761800 • Fax +46(0)49181900

BE - GE
Establ. 1934

Parts Replacements List

631367 Trim kit NIGHTFALL

High backrest

3000, 3100, 3400

Valid from 070601 to

Doc. R1-631367

Date 071105

Rev.

Rev.Date

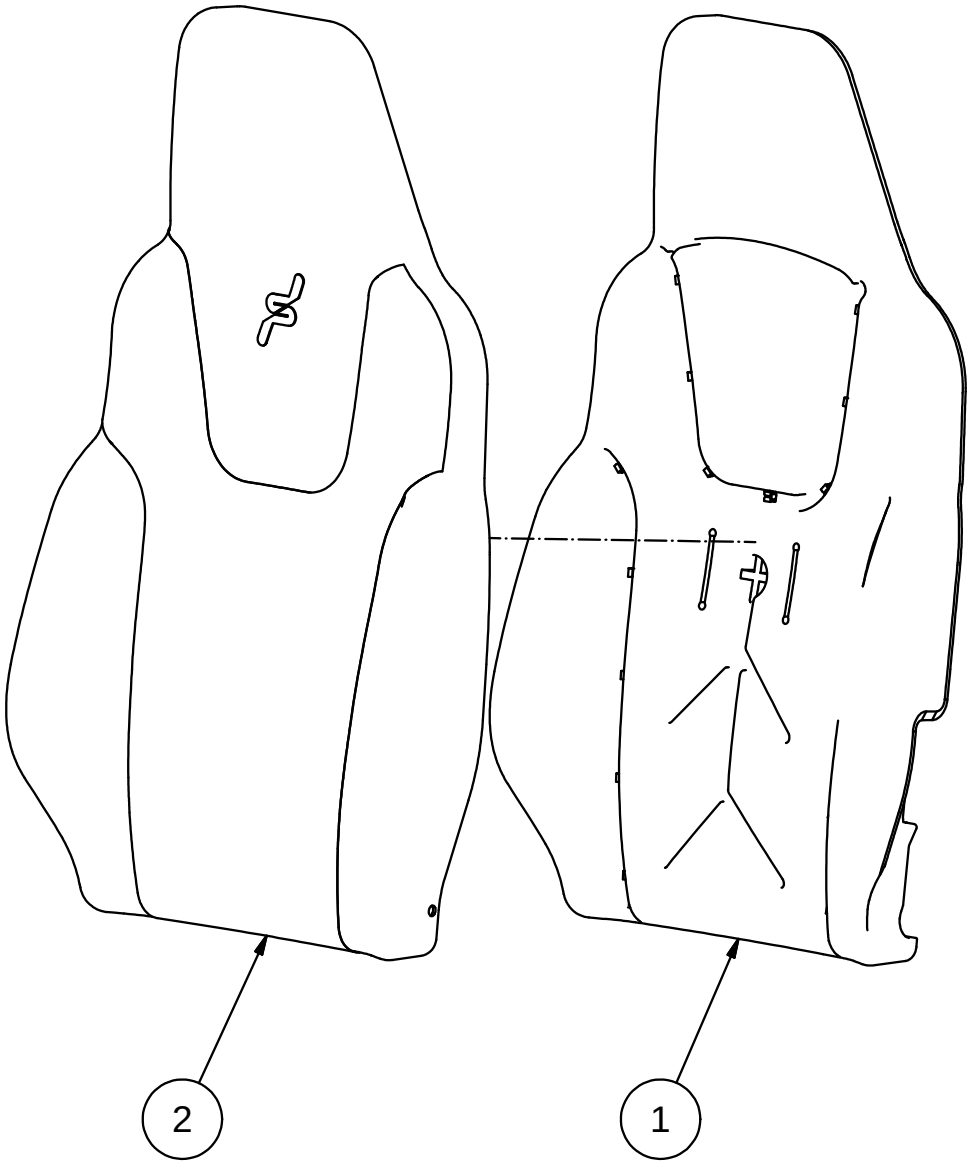

Fig.	Part. No.	Quantity	Description		
1	631074	1	FOAM BACKREST		
2	641589	1	TRIM BACKREST		NIGHTFALL

Be-Ge Industri AB • Box 912 • S-572 29 Oskarshamn • Sweden • Phone +46(0)491761800 • Fax +46(0)49181900

BE - GE
Establ. 1934

Parts Replacements List

631368 Trim kit NIGHTFALL

High backrest, shoulder support

3000, 3100

Valid from 070601 to

Doc. R1-631368

Date 071105

Rev.

Rev.Date

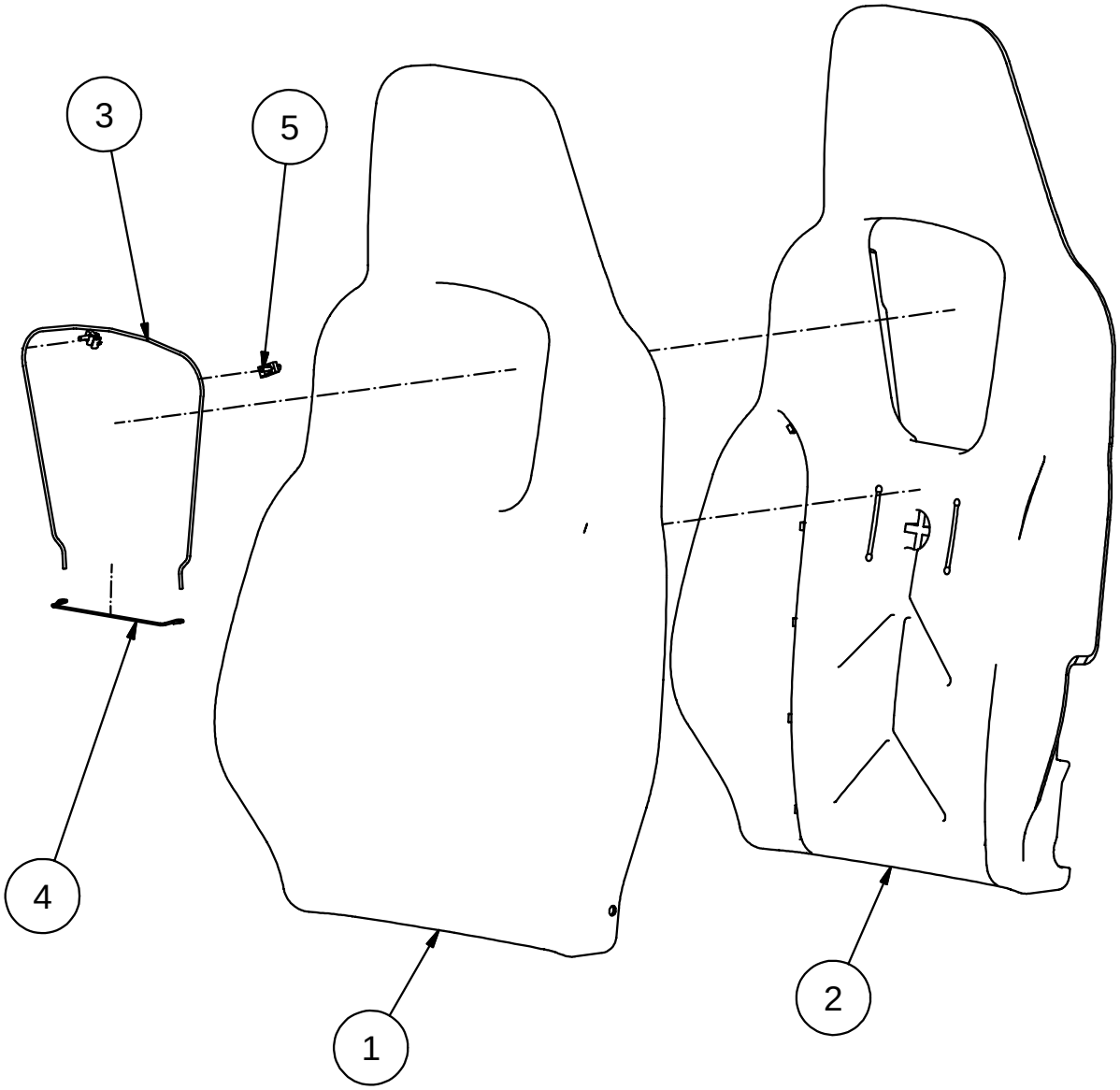

Fig.	Part. No.	Quantity	Description		
1	641585	1	TRIM BACKREST	SA	NIGHTFALL
2	631248	1	FOAM BACKREST, SHOULDER ADJ		
3	631173	1	YOKE, TRIM SHOULDER ADJ		
4	631230	1	CROSS YOKE, SHOULDER ADJ		
5	660602	2	PLASTIC CLIP		

Be-Ge Industri AB • Box 912 • S-572 29 Oskarshamn • Sweden • Phone +46(0)491761800 • Fax +46(0)49181900

BE - GE
Establ. 1934

Parts Replacements List

631369 Trim kit NIGHTFALL

640 backrest

3000, 3100, 3400

Valid from 070601 to

Doc. R1-631369

Date 071105

Rev.

Rev.Date

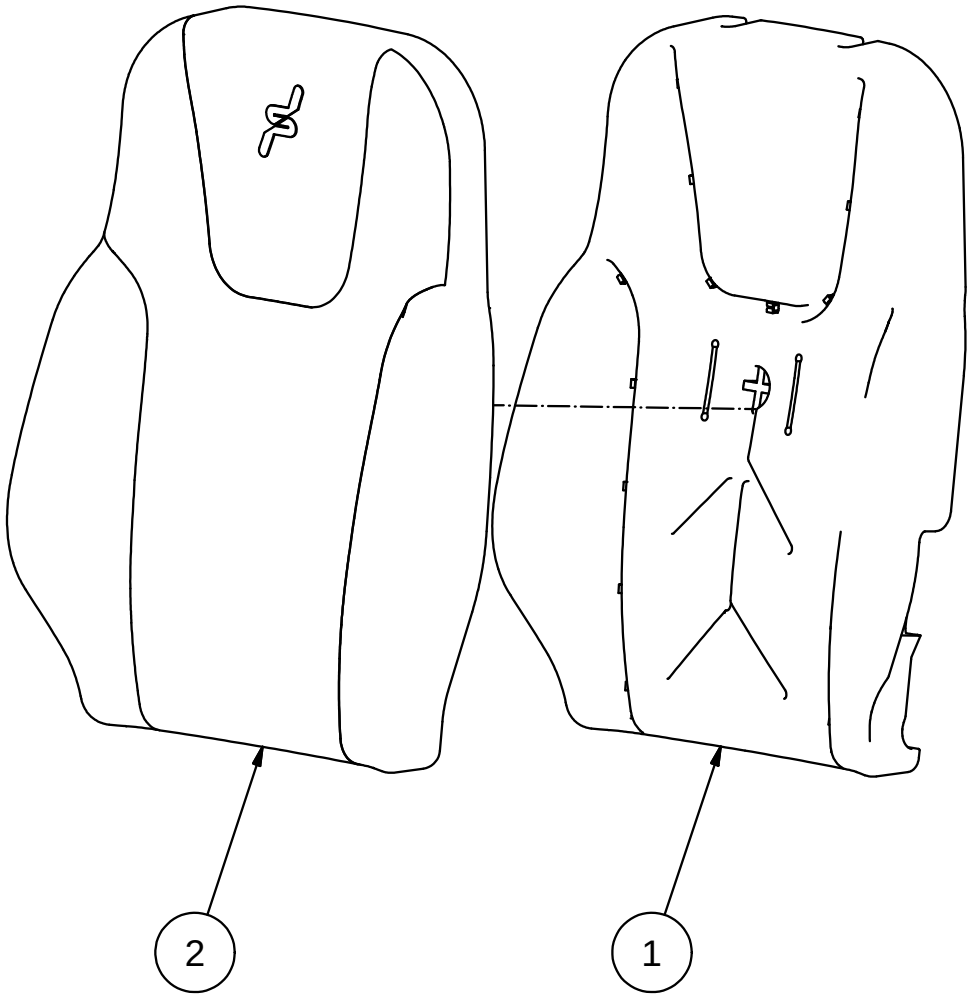

Fig.	Part. No.	Quantity	Description		
1	631201	1	FOAM BACKREST, LOW		
2	641590	1	TRIM BACKREST		NIGHTFALL

Be-Ge Industri AB • Box 912 • S-572 29 Oskarshamn • Sweden • Phone +46(0)491761800 • Fax +46(0)49181900

BE - GE
Establ. 1934

Parts Replacements List

631605 Trim kit NIGHTFALL XSS

Backrest 640

3000, 3100, 3400

Valid from 090101 to

Doc. R1-631605

Date 090101

Rev.

Rev.Date

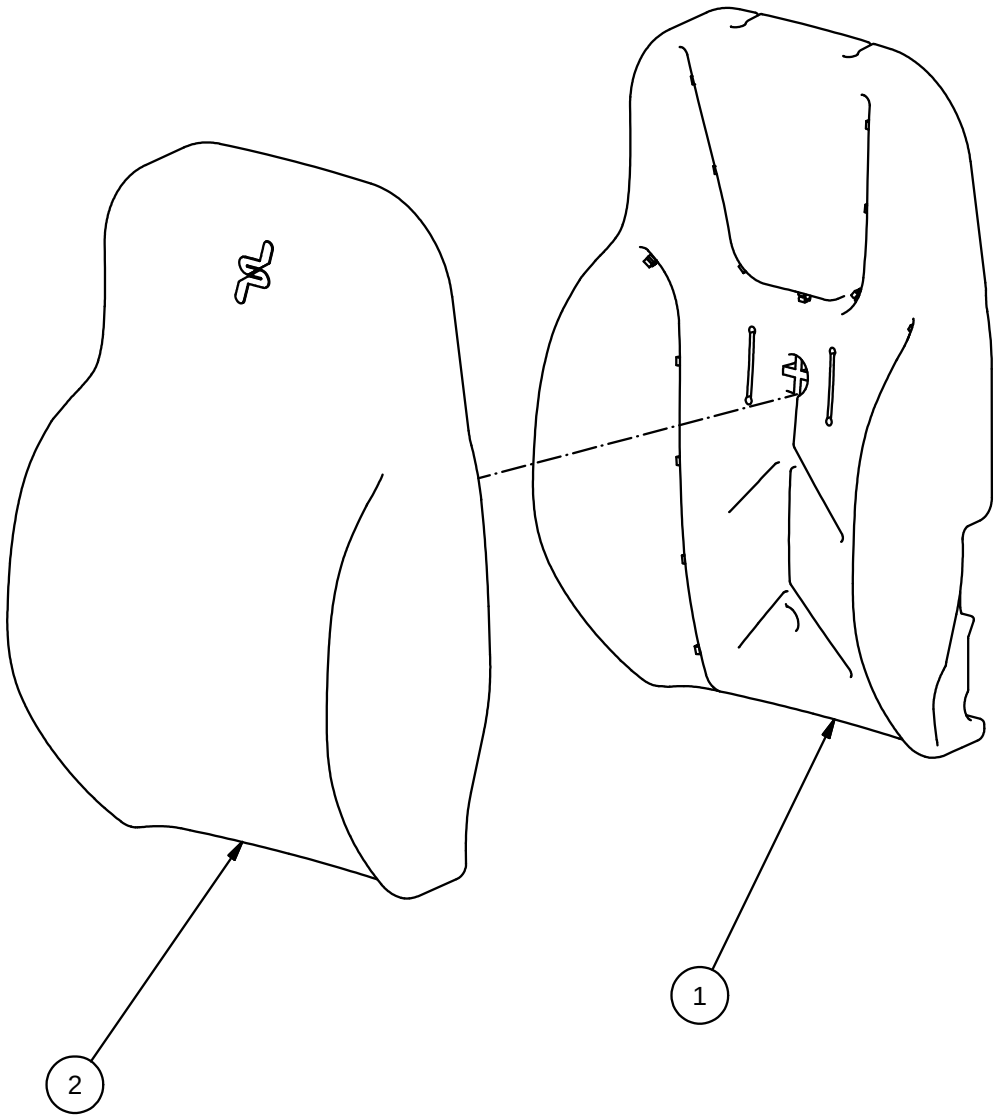

Fig.	Part. No.	Quantity	Description		
1	631441	1	BACKREST FOAM LOW XSS		
2	641674	1	TRIM BACKREST 640 XSS		

Be-Ge Industri AB • Box 912 • S-572 29 Oskarshamn • Sweden • Phone +46(0)491761800 • Fax +46(0)49181900

BE - GE
Establ. 1934

Parts Replacements List

631396 Trim kit ALLIANCE

High backrest

3000, 3100, 3400

Valid from 070601 to

Doc. R1-631396

Date 071105

Rev.

Rev.Date

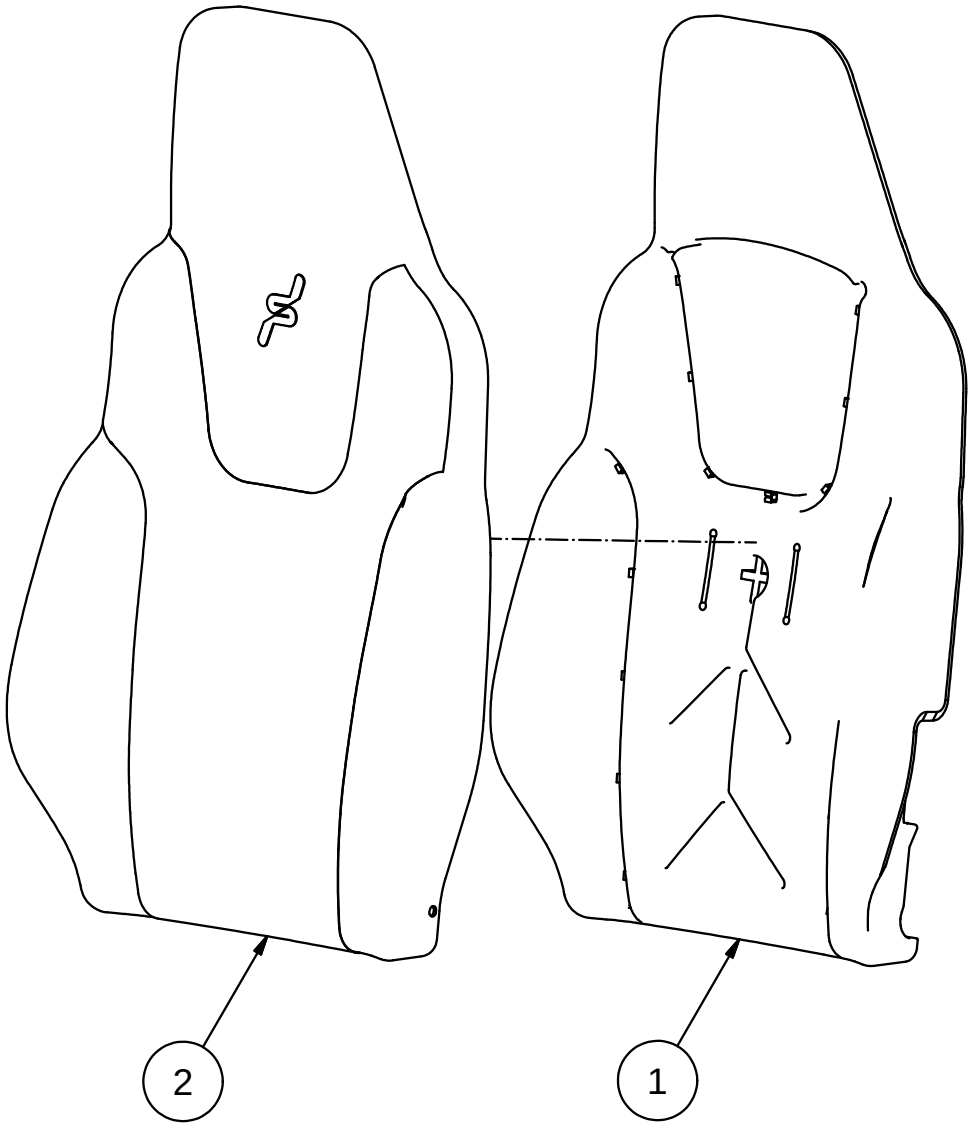

Fig.	Part. No.	Quantity	Description		
1	631074	1	FOAM BACKREST		
2	641630	1	TRIM BACKREST		ALLIANCE

Be-Ge Industri AB • Box 912 • S-572 29 Oskarshamn • Sweden • Phone +46(0)491761800 • Fax +46(0)49181900

BE - GE
Establ. 1934

Parts Replacements List

631397 Trim kit ALLIANCE

High backrest, shoulder support

3000, 3100

Valid from 070601 to

Doc. R1-631397

Date 071105

Rev.

Rev.Date

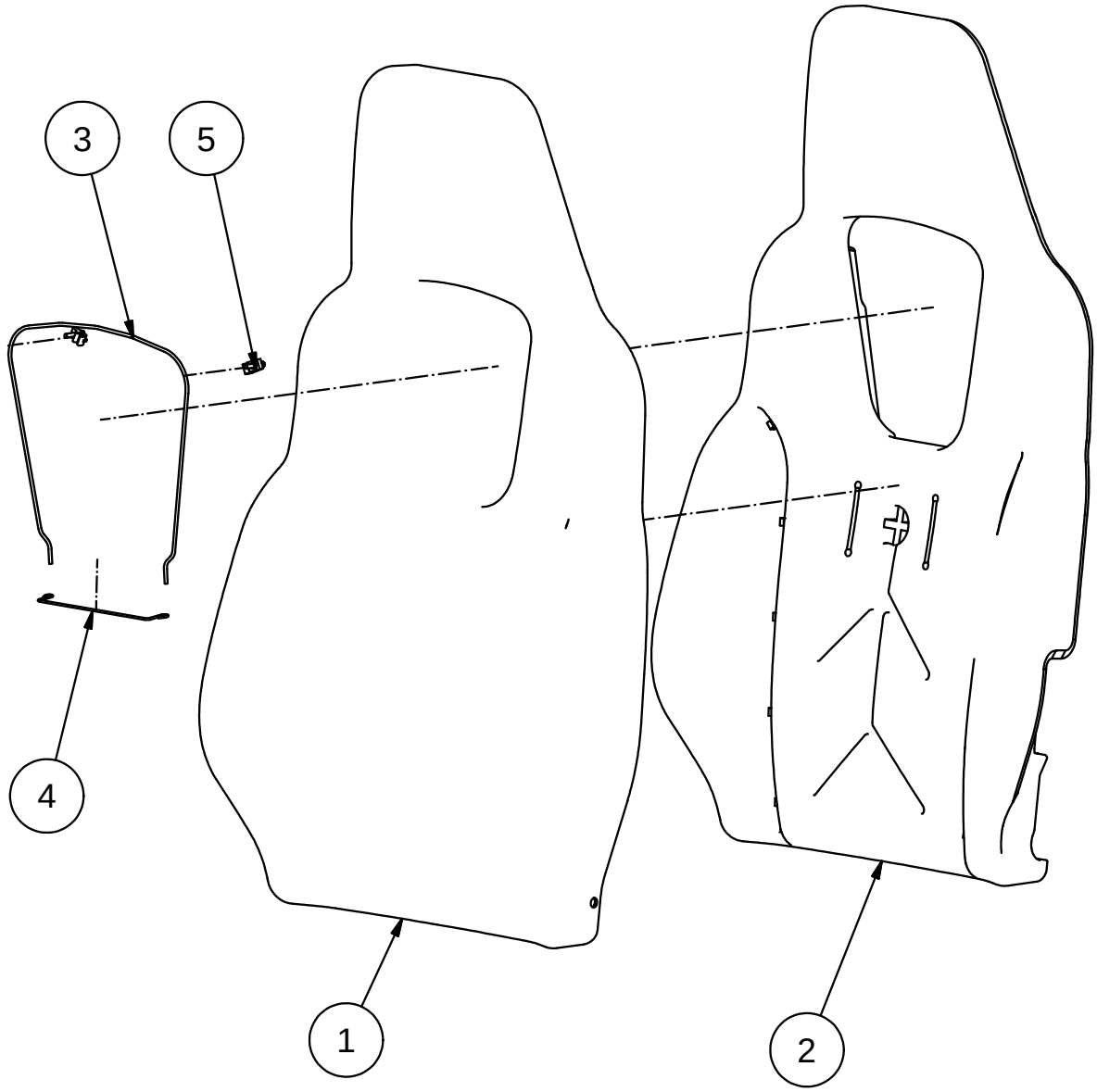

Fig.	Part. No.	Quantity	Description		
1	641627	1	TRIM BACKREST SS		ALLIANCE
2	631248	1	FOAM BACKREST, SHOULDER ADJ		
3	631173	1	YOKE, TRIM SHOULDER ADJ		
4	631230	1	CROSS YOKE, SHOULDER ADJ		
5	660602	2	PLASTIC CLIP		

Be-Ge Industri AB • Box 912 • S-572 29 Oskarshamn • Sweden • Phone +46(0)491761800 • Fax +46(0)49181900

BE - GE
Establ. 1934

Parts Replacements List

631398 Trim kit ALLIANCE

Backrest 640

3000, 3100, 3400

Valid from 070601 to

Doc. R1-631398

Date 071105

Rev.

Rev.Date

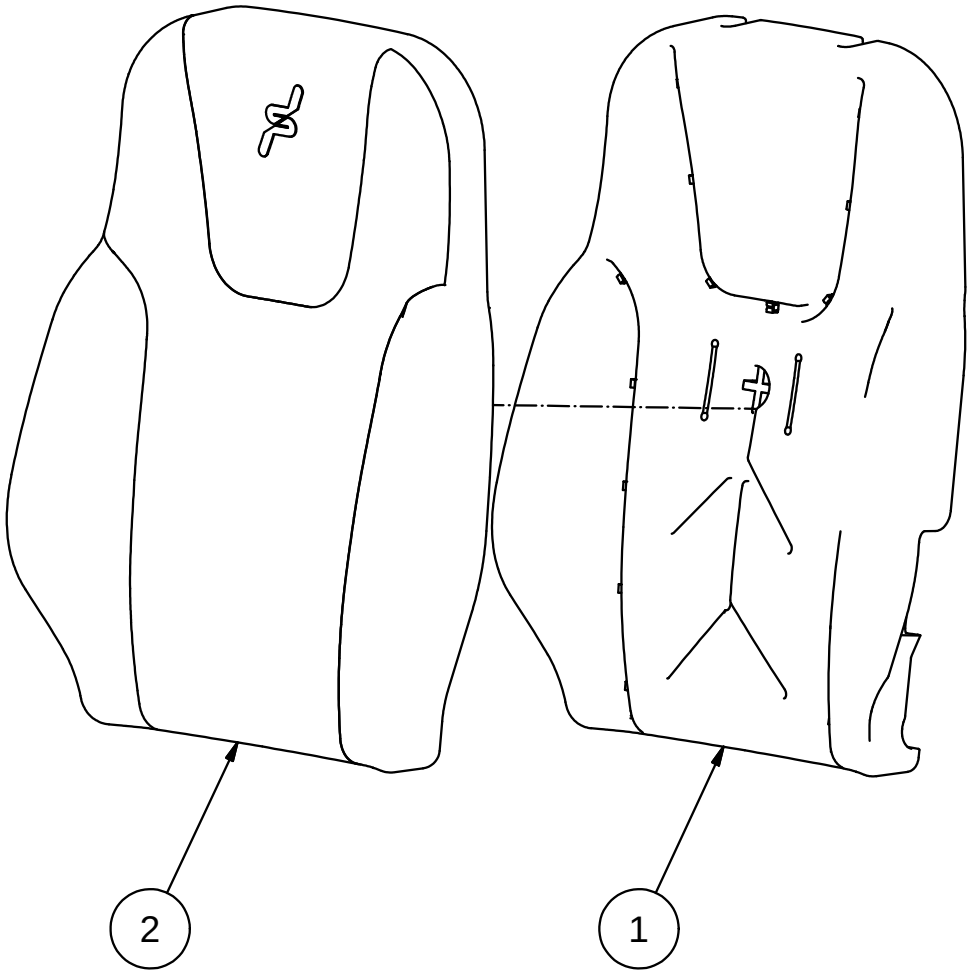

Fig.	Part. No.	Quantity	Description		
1	631201	1	FOAM BACKREST, LOW		
2	641631	1	TRIM BACKREST 640		ALLIANCE

Be-Ge Industri AB • Box 912 • S-572 29 Oskarshamn • Sweden • Phone +46(0)491761800 • Fax +46(0)49181900

BE - GE
Establ. 1934

Parts Replacements List

631430 Trim kit LEATHER BLACK/GREY

High backrest, 3000, 3100, 3400

Valid from 070601 to

Doc. R1-631430

Date 071105

Rev.

Rev.Date

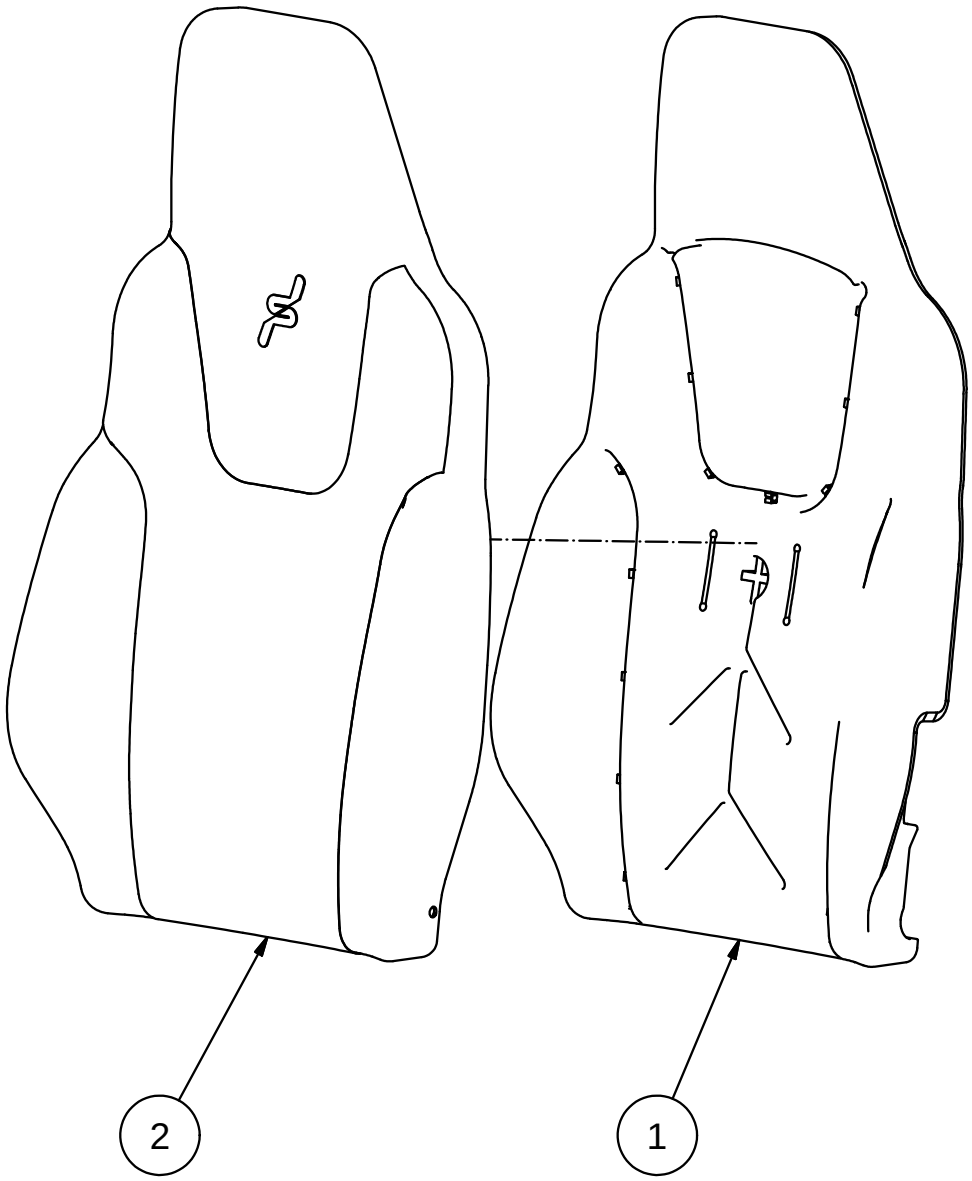

Fig.	Part. No.	Quantity	Description		
1	631074	1	FOAM BACKREST		
2	641642	1	TRIM BACKREST		LEATHER BLACK/GREY

Be-Ge Industri AB • Box 912 • S-572 29 Oskarshamn • Sweden • Phone +46(0)491761800 • Fax +46(0)49181900

BE - GE
Establ. 1934

Parts Replacements List

631431 Trim kit LEATHER BLACK/GREY

High backrest, shoulder support, 3000, 3100

Valid from 070601 to

Doc. R1-631431
Date 071105
Rev.
Rev.Date

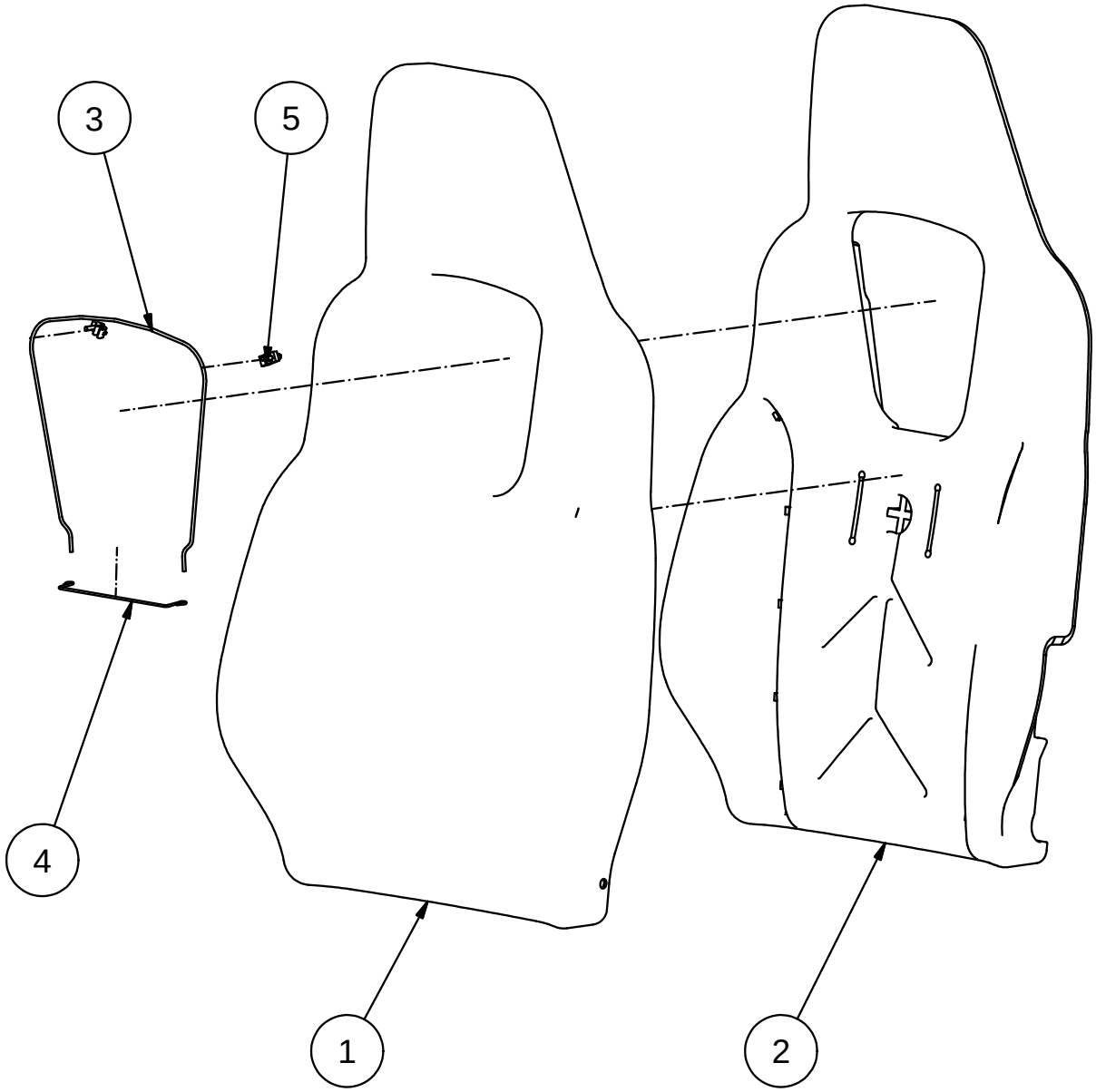

Fig.	Part. No.	Quantity	Description		
1	641639	1	TRIM BACKREST SS		LEATHER BLACK/GREY
2	631248	1	FOAM BACKREST, SHOULDER ADJ		
3	631173	1	YOKE, TRIM SHOULDER ADJ		
4	631230	1	CROSS YOKE, SHOULDER ADJ		
5	660602	2	PLASTIC CLIP		

Be-Ge Industri AB • Box 912 • S-572 29 Oskarshamn • Sweden • Phone +46(0)491761800 • Fax +46(0)49181900

BE - GE
Establ. 1934

Parts Replacements List

631432 Trim kit LEATHER BLACK/GREY

Backrest 640, 3000, 3100, 3400

Valid from 070601 to

Doc.	R1-631432
Date	071105
Rev.	
Rev.Date	

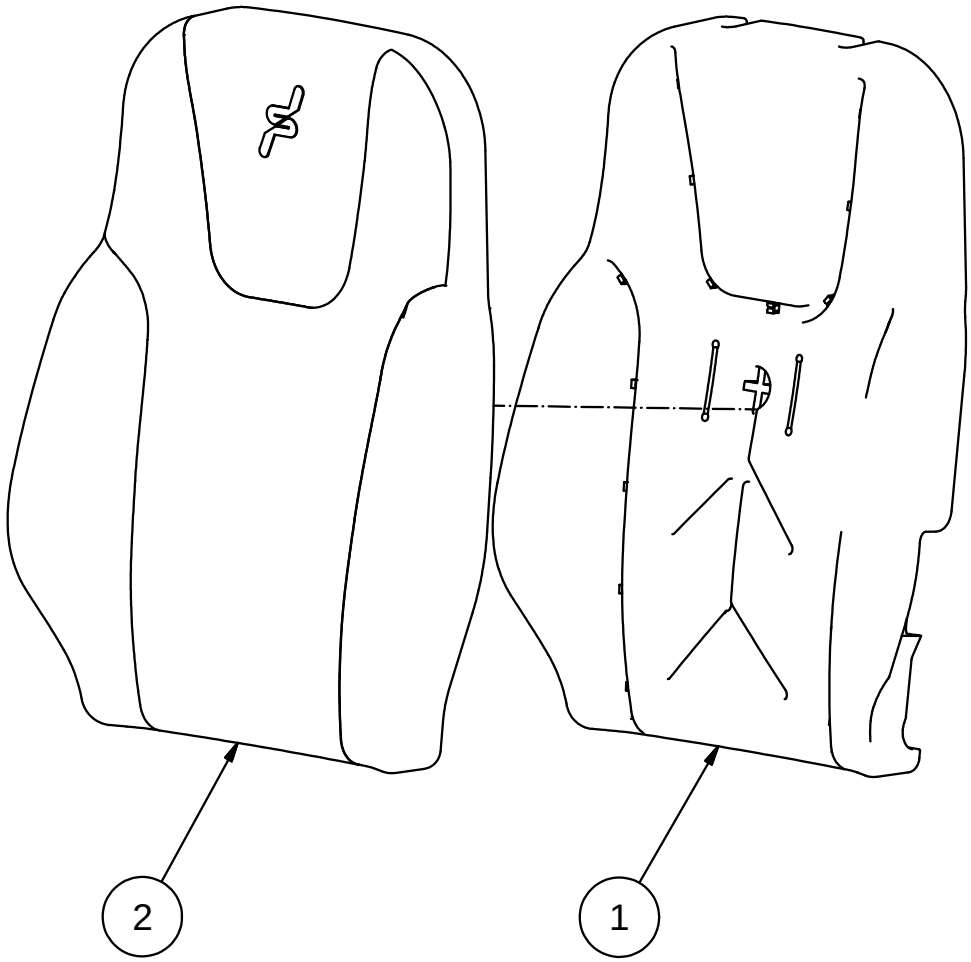

Fig.	Part. No.	Quantity	Description		
1	631201	1	FOAM BACKREST, LOW		
2	641643	1	TRIM BACKREST 640		LEATHER BLACK/GREY

Be-Ge Industri AB • Box 912 • S-572 29 Oskarshamn • Sweden • Phone +46(0)491761800 • Fax +46(0)49181900

BE-GE
Establ. 1934

Parts Replacements List

631295 Shoulder support

Black leather

3000, 3100

Valid from 070601 to

Doc. R1-631295

Date 071105

Rev.

Rev.Date

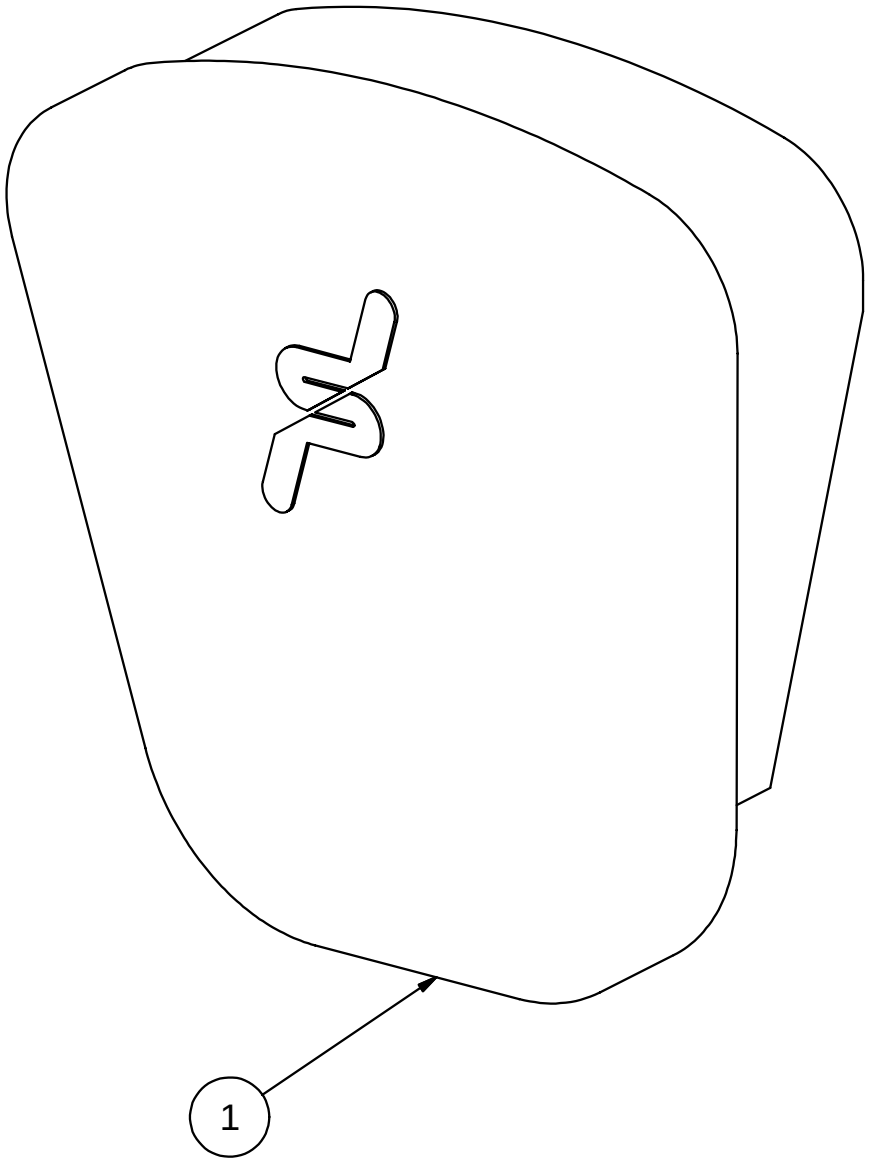

Fig.	Part. No.	Quantity	Description		
1	631295	1	SHOULDER SUPPORT		BLACK LEATHER

Be-Ge Industri AB • Box 912 • S-572 29 Oskarshamn • Sweden • Phone +46(0)491761800 • Fax +46(0)49181900

BE - GE
Establ. 1934

Parts Replacements List

631313 Headrest kit NIGHTFALL

4-way

3000, 3100, 3400

Valid from 070601 to

Doc. R1-631313

Date 071105

Rev.

Rev.Date

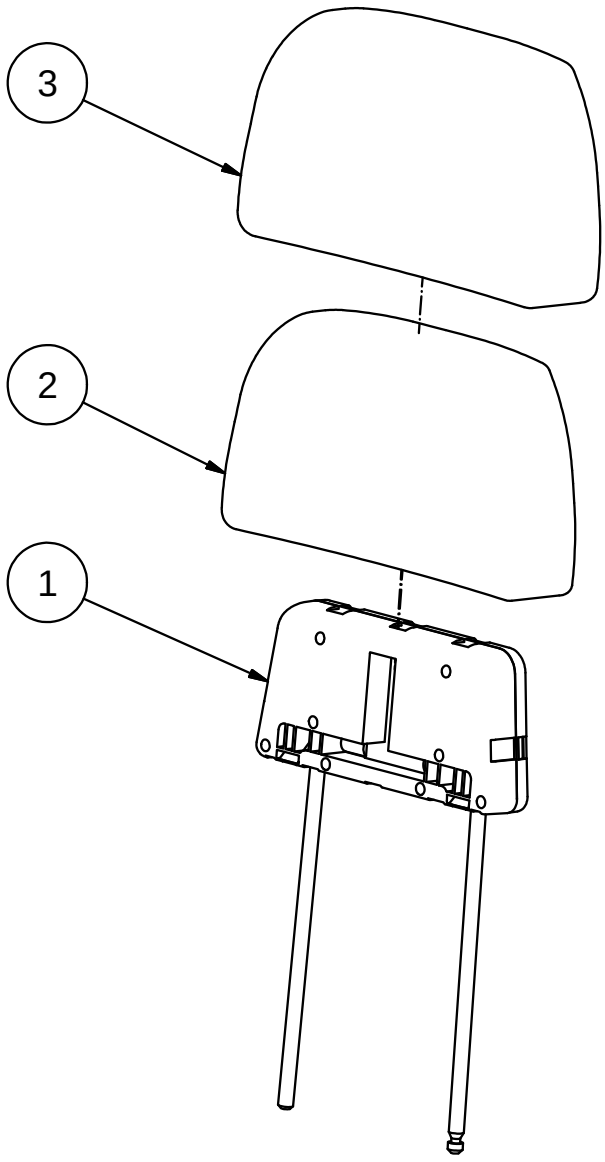

Fig.	Part. No.	Quantity	Description		
1	621567	1	HEAD REST FRAMEWORK ASM		
2	631250	1	FOAM HEAD REST		
3	641588	1	TRIM HEADREST		NIGHTFALL

Be-Ge Industri AB • Box 912 • S-572 29 Oskarshamn • Sweden • Phone +46(0)491761800 • Fax +46(0)49181900

BE - GE
Establ. 1934

Parts Replacements List

631399 Headrest kit ALLIANCE

4-way

3000, 3100, 3400

Valid from 070601 to

Doc. R1-631399

Date 071105

Rev.

Rev.Date

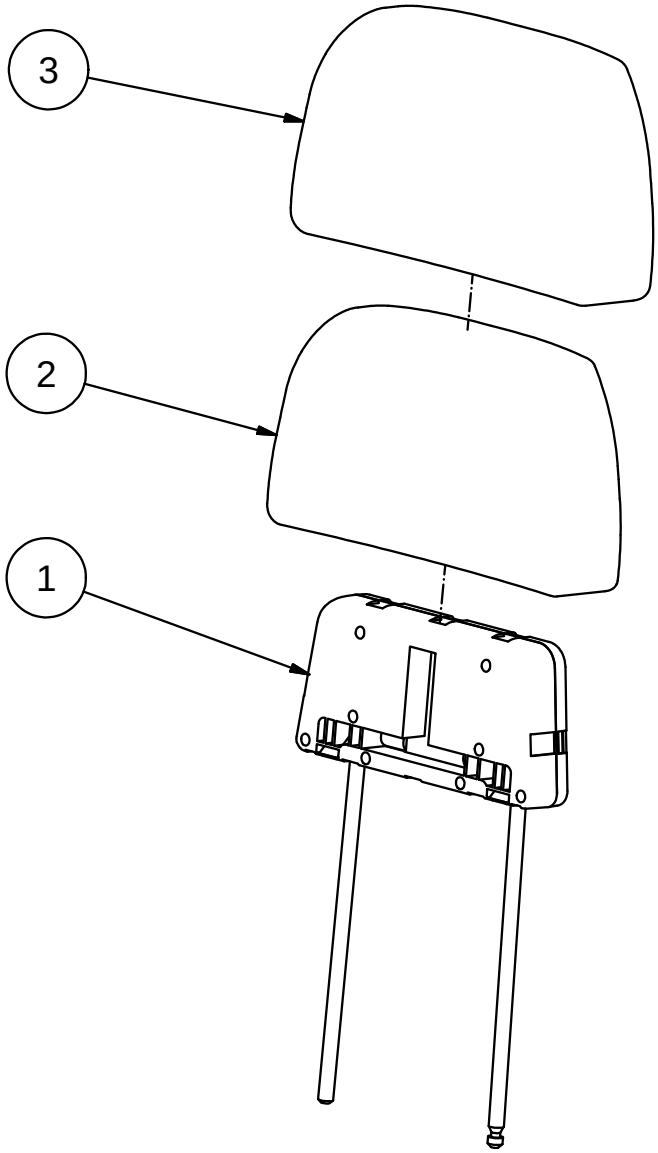

Fig.	Part. No.	Quantity	Description		
1	621567	1	HEAD REST FRAMEWORK ASM		
2	631250	1	FOAM HEAD REST		
3	641629	1	TRIM HEADREST		ALLIANCE

Be-Ge Industri AB • Box 912 • S-572 29 Oskarshamn • Sweden • Phone +46(0)491761800 • Fax +46(0)49181900

BE - GE Establ. 1934	Parts Replacements List **631433 Headrest kit LEATHER BLACK/GREY** **4-way, 3000, 3100, 3400**	Doc. R1-631433 Date 071105 Rev.
	Valid from to	Rev.Date

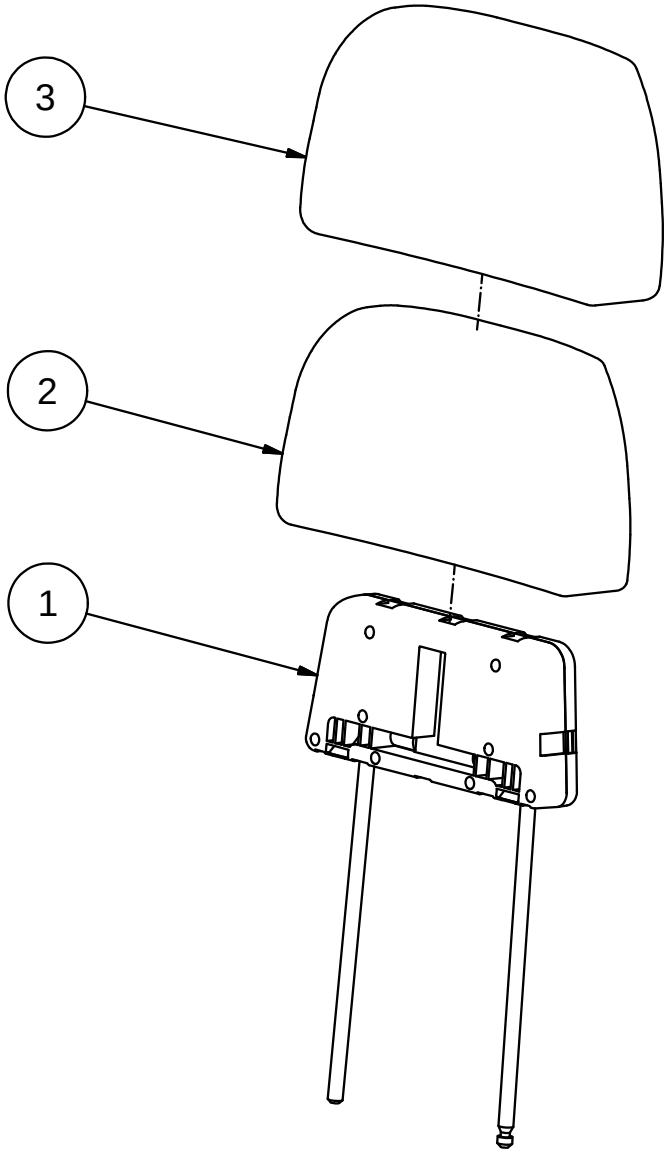

Fig.	Part. No.	Quantity	Description		
1	621567	1	HEAD REST FRAMEWORK ASM		
2	631250	1	FOAM HEAD REST		
3	641641	1	TRIM HEADREST		ALLIANCE

Be-Ge Industri AB • Box 912 • S-572 29 Oskarshamn • Sweden • Phone +46(0)491761800 • Fax +46(0)49181900

BE-GE Establ. 1934	Parts Replacements List **631382 Cable harness kit** **3000, 3100, 3400**	Doc. R1-631382 Date 071105 Rev.
	Valid from 070601 to	Rev.Date

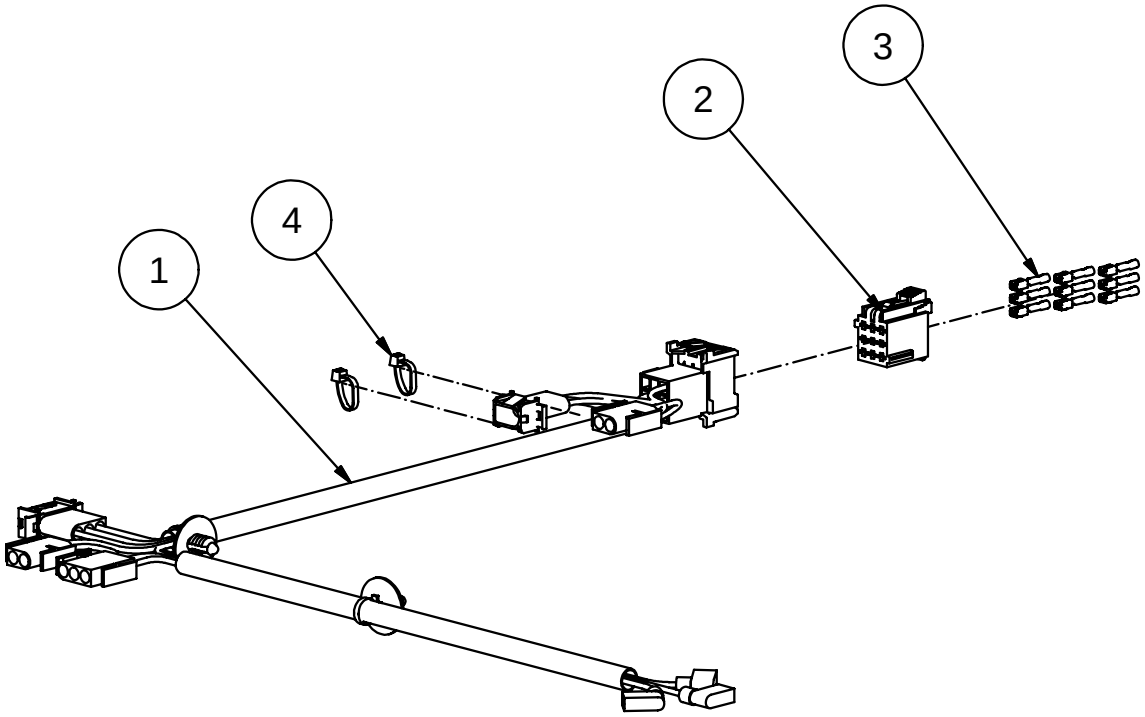

Fig.	Part. No.	Quantity	Description		
1	631146	1	CABLE HARNESS		
2	660615	1	HOUSING	FEMALE	YELLOW
3	660616	9	TERMINAL		
4	660109	2	CABLE TIE		

Be-Ge Industri AB • Box 912 • S-572 29 Oskarshamn • Sweden • Phone +46(0)491761800 • Fax +46(0)49181900

BE-GE Establ. 1934	Parts Replacements List **631384 Cover, seat heater** **Left/Right** **3000, 3100, 3400**	Doc. R1-631384 Date 071105 Rev.
	Valid from 070601 to	Rev.Date

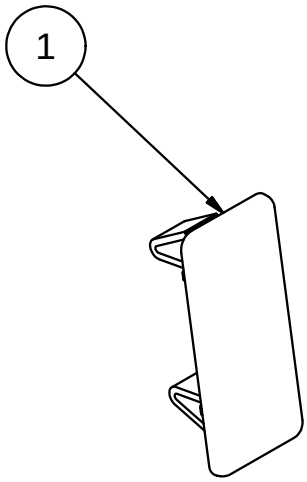

Fig.	Part. No.	Quantity	Description		
1	631225	1	COVER, SWITCH		HEATER

Be-Ge Industri AB • Box 912 • S-572 29 Oskarshamn • Sweden • Phone +46(0)491761800 • Fax +46(0)49181900

BE-GE Establ. 1934	Parts Replacements List **631383 Seat heater kit** **12/24 volt** **3000, 3100, 3400**	Doc. R1-631383 Date 071105 Rev.
	Valid from 070601 to	Rev.Date

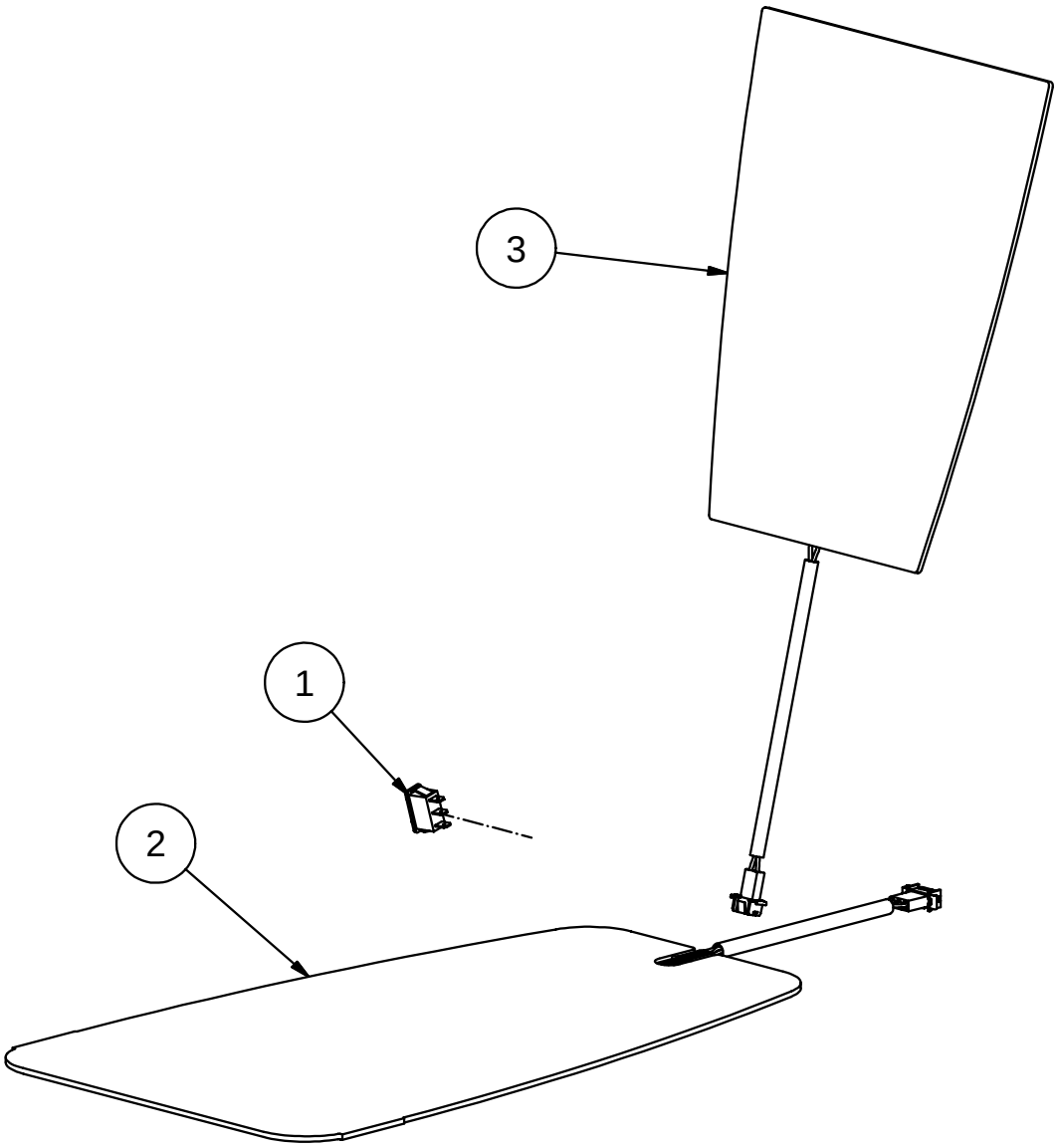

Fig.	Part. No.	Quantity	Description		
1	660590	2	SWITCH		
2	631158	1	SEAT HEATER		CUSHION
3	631159	1	SEAT HEATER		SQUAB

Be-Ge Industri AB • Box 912 • S-572 29 Oskarshamn • Sweden • Phone +46(0)491761800 • Fax +46(0)49181900

BE-GE Establ. 1934	Parts Replacements List **631422 Cover, airvent** **Left/Right** **3000, 3100, 3400**	Doc. R1-631422 Date 071105 Rev.
	Valid from 070601 to	Rev.Date

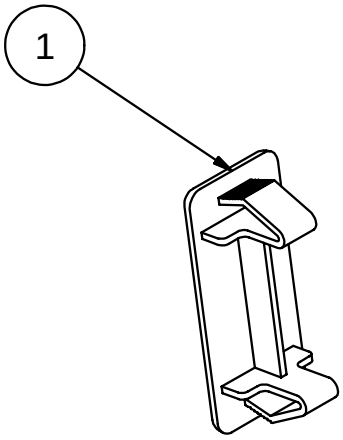

Fig.	Part. No.	Quantity	Description		
1	631224	2	COVER, AIRVENT CONTROL		

Be-Ge Industri AB • Box 912 • S-572 29 Oskarshamn • Sweden • Phone +46(0)491761800 • Fax +46(0)49181900

BE-GE Establ. 1934	Parts Replacements List **631418 Airvent kit** **Left/Right 24 Volt** **3000, 3100, 3400**	Doc. R1-631418 Date 071105 Rev. 1
	Valid from 070601 to	Rev.Date 090101

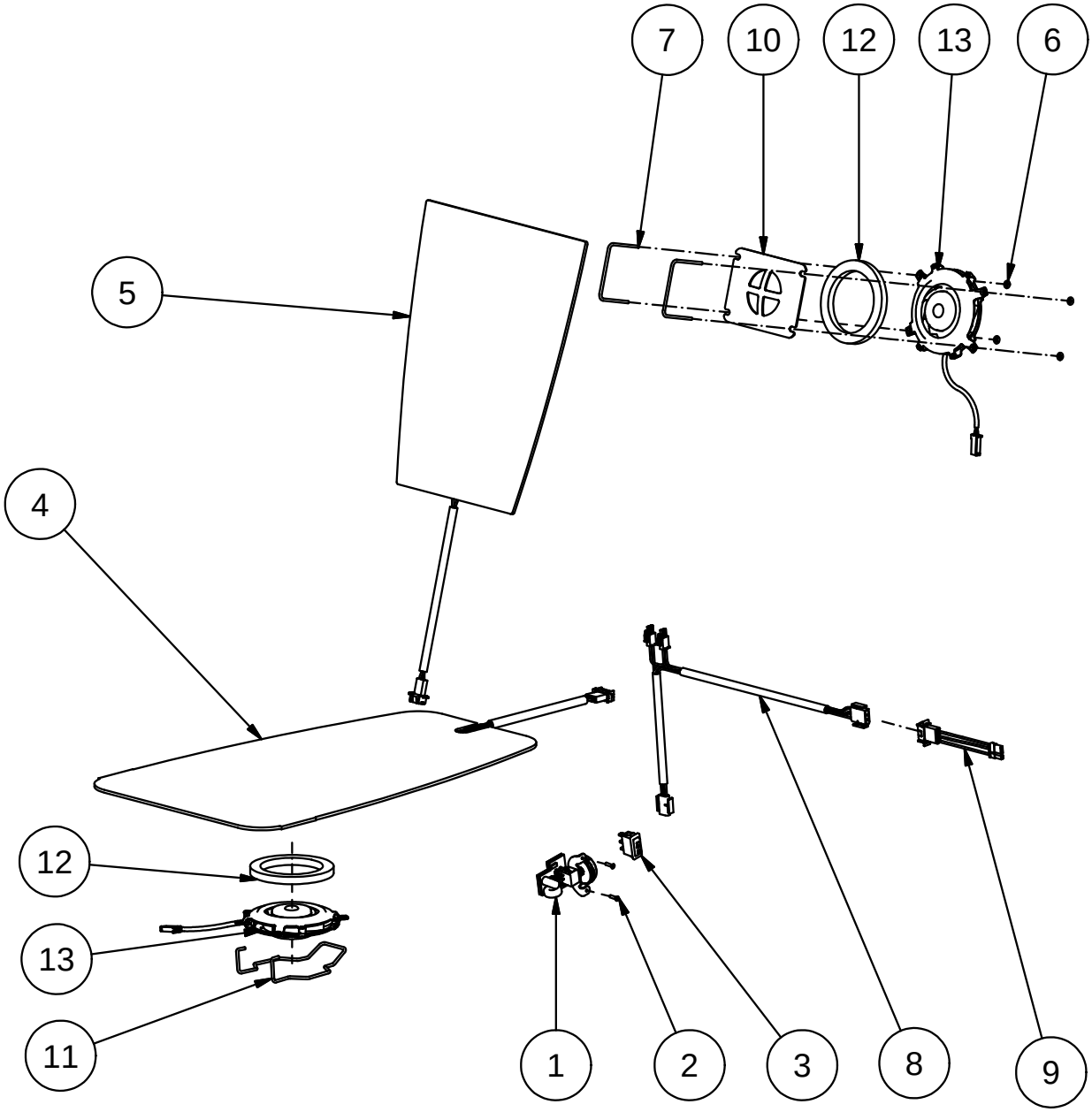

Fig.	Part. No.	Quantity	Description		
1	631541	1	FAN ADJUSTMENT ASM 24V		
2	501121	2	MFX M3x12 (SV.KR 4.8 POZ)		
3	660590	1	SWITCH		
4	631158	1	SEAT HEATER		CUSHION
5	631159	1	SEAT HEATER		SQUAB
6	652051	4	WASHER A-LOCK	3x9.5	UNTREATED
7	631087	2	YOKE		
8	631160	1	CABLE HARNESS AIRVENT		
9	631538	1	CABLE HARNESS AIRVENT		
10	631228	1	PROTECTIVE PLATE		
11	631086	1	YOKE		
12	620455	2	SEALING		100x75x9
13	631393	2	FAN 3000		24 V

Be-Ge Industri AB • Box 912 • S-572 29 Oskarshamn • Sweden • Phone +46(0)491761800 • Fax +46(0)49181900

BE - GE Establ. 1934	Parts Replacements List **631458 Control kit Flexi** **3000, 3100**	Doc. R1-631458 Date 080220 Rev.
	Valid from 080220 to	Rev.Date

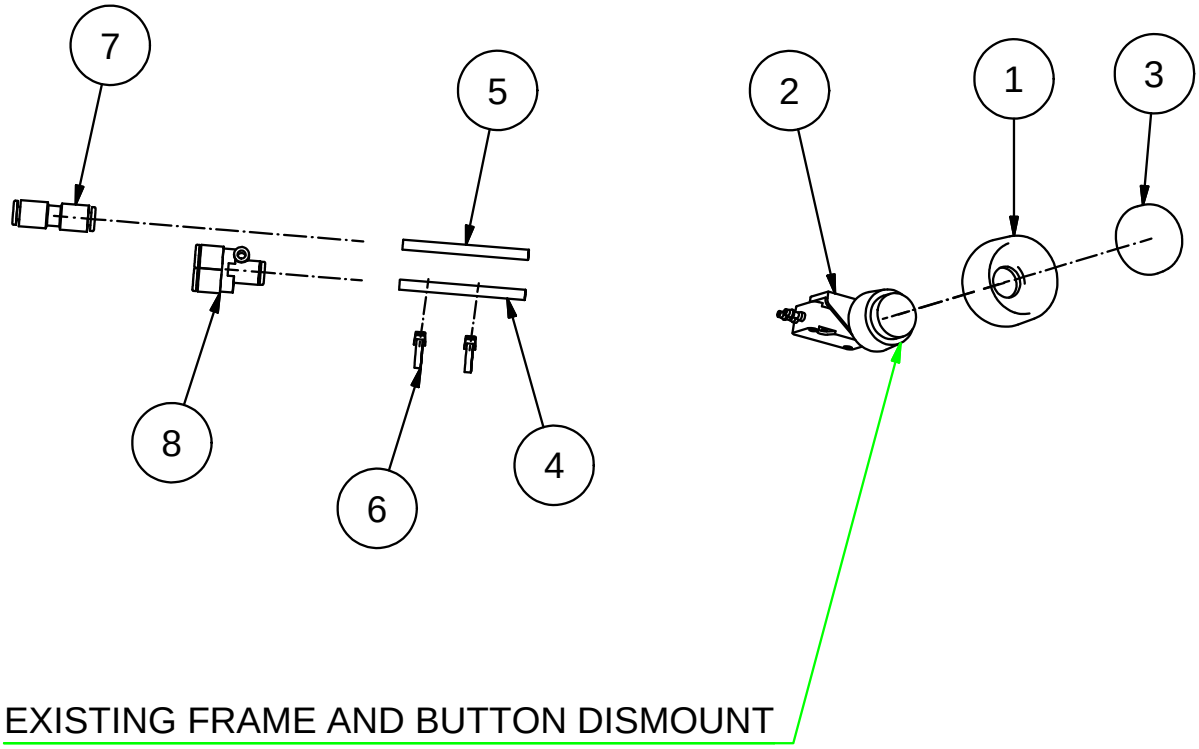

Fig.	Part. No.	Quantity	Description		
1	631438	1	FRAME		
2	660637	1	3/2 VALVE		
3	631437	1	BUTTON		
4	660609	0.4 LPM	TUBE 4x2,5 RED		
5	660607	0.6 LPM	TUBE 4x2,5 BLUE		
6	660109	2	CABLE TIE		
7	660557	1	SLIP-IN CONNECTION	4 MM	STRAIGHT
8	660603	1	Y-CONNECTION		

Be-Ge Industri AB • Box 912 • S-572 29 Oskarshamn • Sweden • Phone +46(0)491761800 • Fax +46(0)49181900

BE - GE Establ. 1934	Parts Replacements List **631453 Vibration Indicator** **3000, 3100, 3400**	Doc. R1-631453 Date 080220 Rev.
	Valid from 080220 to	Rev.Date

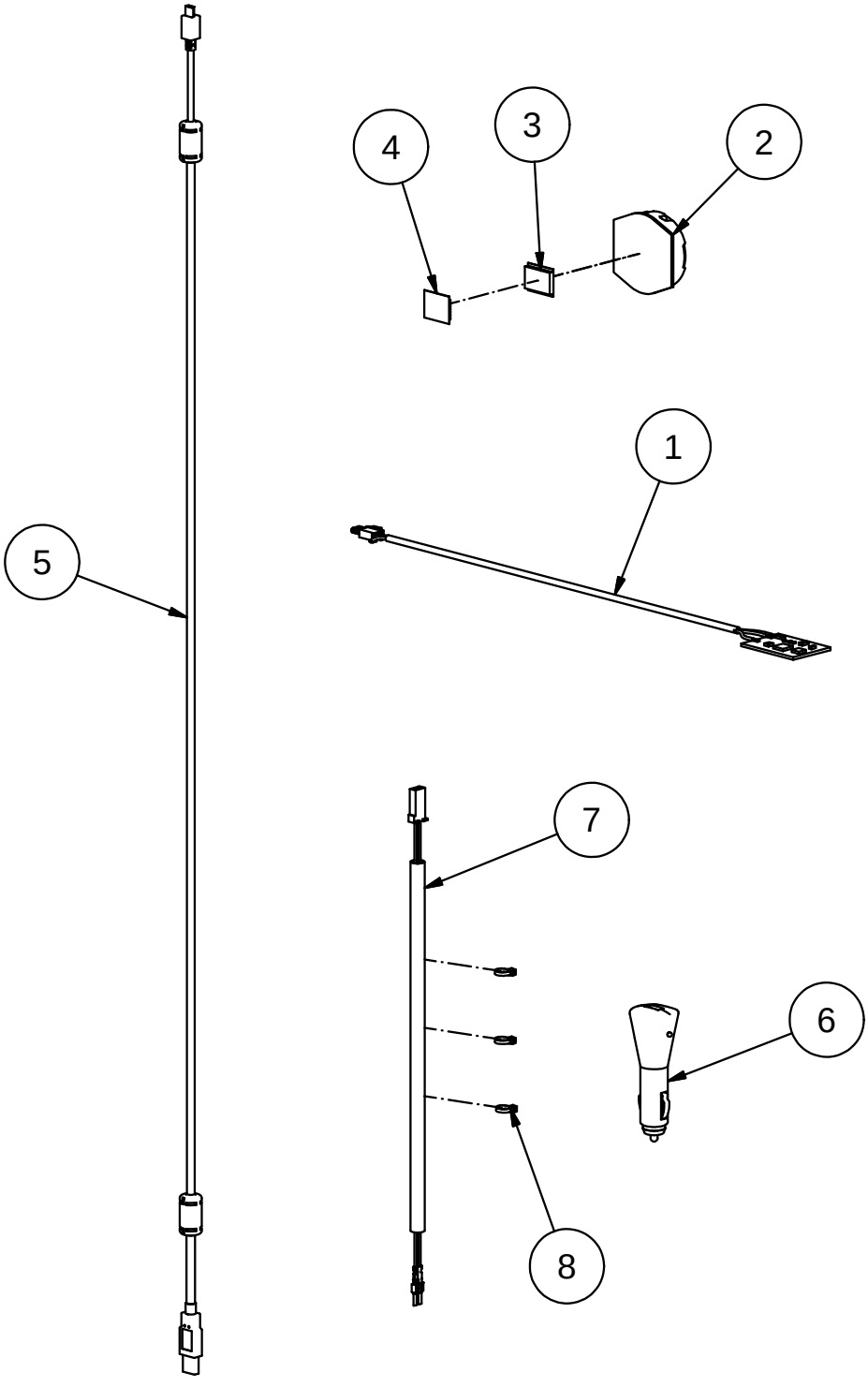

Fig.	Part. No.	Quantity	Description		
1	631446	1	VIBRATION SENSOR		
2	631447	1	VIBRATION INDICATOR		
3	631450	1	VELCRO TAPE - FEMALE		
4	631451	1	VELCRO TAPE-MALE		
5	631449	1	USB CABLE		
6	631448	1	USB TRUCK ADAPTER		
7	631427	1	CABLE HARNESS VIBRATION SENSOR		
8	660109	3	CABLE TIE		

Be-Ge Industri AB • Box 912 • S-572 29 Oskarshamn • Sweden • Phone +46(0)491761800 • Fax +46(0)49181900

BE-GE Establ. 1934	Parts Replacements List **631594 Seat switch kit** **3000, 3100, 3400**	Doc. R1-631594 Date 090101 Rev.
	Valid from 090101 to	Rev.Date

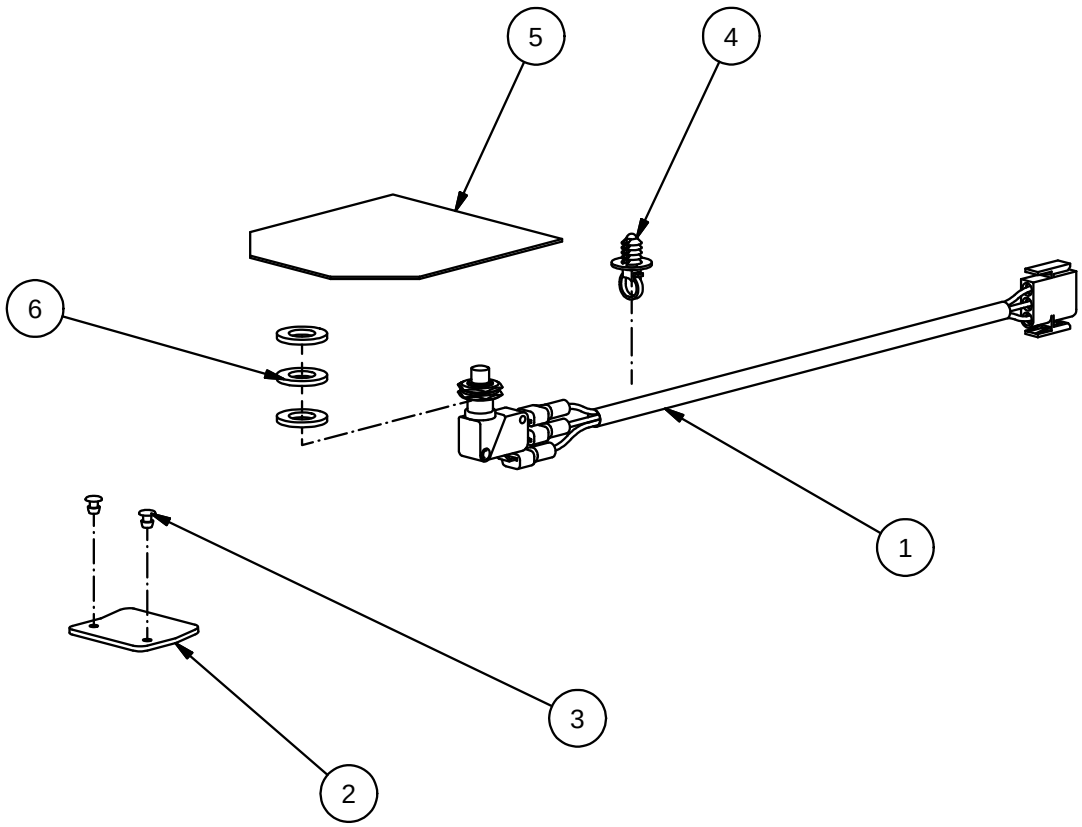

Fig.	Part. No.	Quantity	Description		
1	631460	1	MICROSWITCH IP40		
2	631499	1	LIMITER, SEAT ADJ		
3	653004	2	RIVET AL/ST	3.2x6	AP/D BS
4	660673	1	CLIP, CABLE TIE		
5	631459	1	SWITCH PLATE, SEAT FOAM		
6	561027	3	WASHER	10.5x20x2	

Be-Ge Industri AB • Box 912 • S-572 29 Oskarshamn • Sweden • Phone +46(0)491761800 • Fax +46(0)49181900